Full Handbook

For
AEV70I*1024 INC_PP 36ZB10GL

Material Nr.
AEV70I-10032

Generation Date
17.12.2025

Contains original handbook

Stock photo

Document Chapters

EX User Manual en TR-Explosionsschutzgehäuse, 70/88; 2G/2D	TR-ECE-BA-GB-0098v16.pdf
Technical info en Info, EU-Baumusterp. IBExU11 ATEX1125 X	TR-ECE-TI-GB-0219-02.PDF
Declaration of conformity de/en Axx70x Baureihe, IBExU 11 ATEX 1125 X	TR-ECE-KE-DGB-0267-10.pdf
Declaration of conformity de/en UKCA, Axx70x, IBExU 11 ATEX 1125 X	TR-ECE-KE-GB-0377-10.pdf
Technical data	

Subject to change.

TR-Electronic GmbH
Eglishalde 6
78647 Trossingen
Tel. +49 (0) 7425 228-0
info@tr-electronic.de
www.tr-electronic.de

Original manual

Rotary Encoder A**70* / A**88* for use in potentially explosive areas

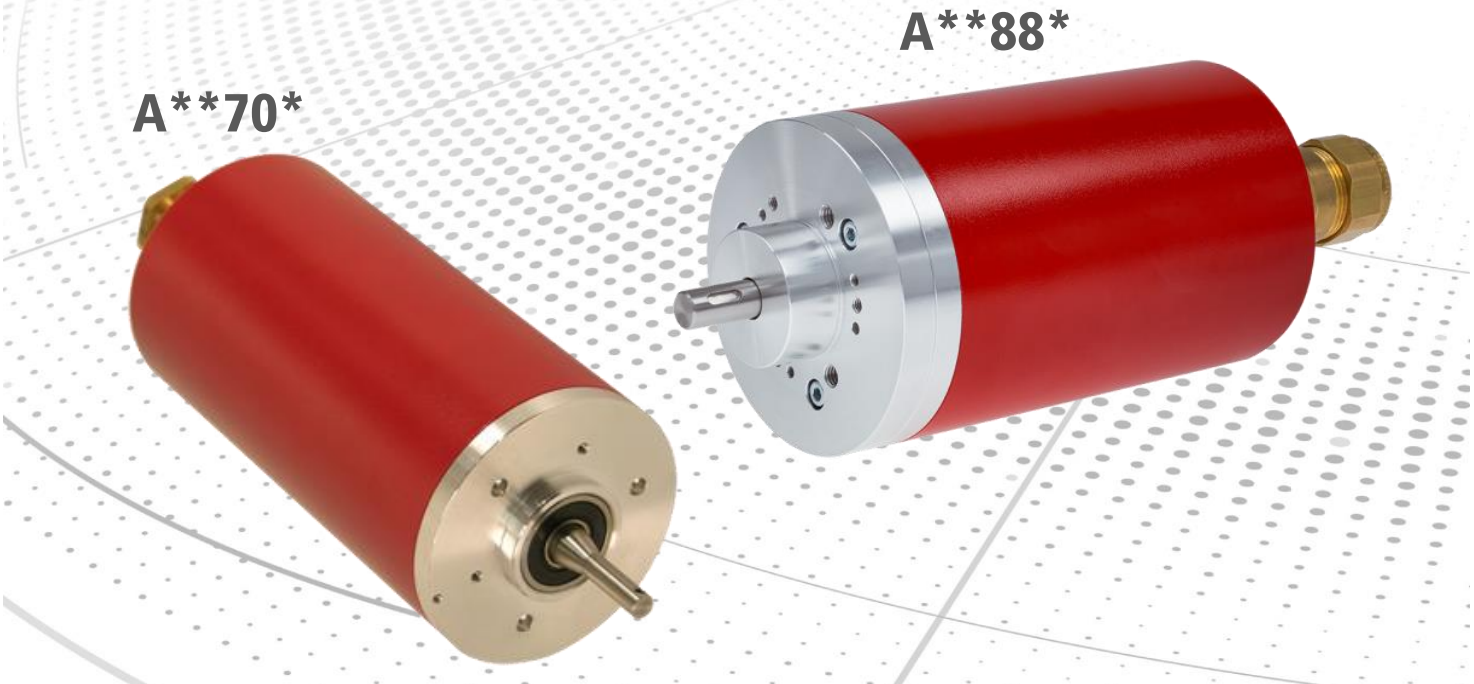

CE 0123

II 2 G Ex db IIC T6 Gb
II 2 D Ex tb IIIC T80°C Db

Date of manufacture: DD.MM.YYYY

_Basic safety instructions
_Intended use
_Product description
_Technical data
_Explosion protection characteristics
_Assembly

Certifications
IBExU 11 ATEX 1125 X
IECEx IBE 21.0025 X

User Manual

TR-ECE-BA-GB-0098 v16 10/09/2025

TR-Electronic GmbH
D-78647 Trossingen
Eglishalde 6
Tel.: (0049) 07425/228-0
Fax: (0049) 07425/228-33
E-mail: info@tr-electronic.de
https://www.tr-electronic.com

Copyright

This manual, including the therein contained images, is protected by copyright. Third party usage of this manual, which deviates from copyright provisions, is prohibited. Reproduction, translation as well as electronic and photographic archiving or modification requires the author's written authorization. Infringements will lead to liability for damage compensation.

The right to amendment is reserved

The right to make any changes in the interest of technical progress is reserved.

Document information

Edition-/Rev.-Date:	10/09/2025
Document-/Rev.-No.:	TR-ECE-BA-GB-0098 v16
File name:	TR-ECE-BA-GB-0098v16.docx
Author:	MÜJ

Text

Cursive or **bold** text represents the title of a document or is used for emphasis.

`Courier`-text shows text which is visible on the display or screen as well as software menu-selections.

" < > " refers to keys on your computer keyboard (e.g. <RETURN>).

© TR-Electronic GmbH 2014, All Rights Reserved

Table of contents

Table of contents **3**

Amendment-index **5**

1 General **6**
- 1.1 Type designation code, rotary encoder with explosion protection enclosure 6
- 1.2 Scope 7
- 1.3 Relevant directives and standards 7
- 1.4 Used abbreviations / Terms 8
- 1.5 Product description 8

2 Basic safety instructions **9**
- 2.1 Symbol- and note definition 9
- 2.2 Obligation of the operator prior to commissioning 10
- 2.3 General dangers with the use of this product 10
- 2.4 Intended use 11
- 2.5 Non-intended use 11
- 2.6 Usage in safety-related applications 12
- 2.7 Warranty and liability 13
- 2.8 Organizational measures 13
- 2.9 Personnel selection and -qualification; basic obligations 14
  - 2.9.1 Electrical installations design, device selection and erection 14
  - 2.9.2 Inspection, maintenance and repair 14
- 2.10 First commissioning / Commissioning 15
- 2.11 Assembly, installation and dismantling 15
- 2.12 Inspection, maintenance and repair 16
- 2.13 Special conditions for safe use, marking "X" 17

3 Transport / Storage **18**

4 Technical data **19**
- 4.1 Power supply 19
- 4.2 Mechanical characteristics 19
- 4.3 Environmental conditions 19
- 4.4 Enclosure materials 20
- 4.5 Cable specifications 21
  - 4.5.1 Cable type “PROFIBUS ECOFAST Hybrid Cable” with 4x1.5+2x0.64 mm^2 21
  - 4.5.2 Cable type „KT-LIYC11Y control cable” with 1x(2x0,5 mm^2 Y) + 14x0,25 mm^2 22
  - 4.5.3 Cable type “Ethernet Hybrid Cable” with 2x2x22 AWG + 3x2x0.18 + 2x1.0 mm^2 23
- 4.6 Explosion protection characteristics 24
  - 4.6.1 Ex-labeling, gas 24
  - 4.6.2 Ex-labeling, dust 25

© TR-Electronic GmbH 2014, All Rights Reserved

5 Assembly ... 26
5.1 Safety-related applications ... 26
5.2 NON safety-related applications ... 27
5.2.1 Solid shaft ... 27
5.2.1.1 Flange-assembly ... 27
5.2.1.2 Clamp flange - assembly ... 28
5.2.1.3 Fixing clamps - assembly ... 29
5.2.1.4 Servo clamps - assembly ... 30
5.2.2 Blind shaft ... 31
5.2.2.1 Dowel pin-Groove – assembly ... 31

6 Equipotential bonding conductor - Connection ... 32

7 Disposal ... 32

8 Annex ... 33
8.1 ATEX certificate ... 33
8.2 EU declaration of conformity, A**70 ... 35
8.3 EC / EU declaration of conformity, A*V70 and A**88 ... 36
8.4 IECEx certificate ... 38
8.5 Accessories ... 41
8.6 Interface-specific user manuals ... 41
8.7 Drawings, A**70 ... 42
8.7.1 Standard ... 42
8.7.2 Shortened construction form ... 43
8.7.3 Extended construction form ... 44
8.8 Drawings, A**88 ... 45
8.8.1 Standard ... 45
8.8.2 Shortened construction form ... 46
8.8.3 Extended construction form ... 47

© TR-Electronic GmbH 2014, All Rights Reserved

Amendment-index

Amendment	Date	Index
First edition	03/06/2014	00
- Temperature range: from –20°C…+40°C to –20°C…+60°C - TR-Explosion Protection Enclosure: new type “A**88” - Revision of the standard version numbers - Working temperature “PROFIBUS ECOFAST Hybrid Cable”: –20°C to +40°C	04/02/2014	01
Notes for the usage in safety-related applications	07/09/2014	02
Additions in the chapter Accessories	03/20/2015	03
Specifications of the Ethernet Hybrid Cable added	07/28/2015	04
EU directives 2014/30/EU (EMC) and 2014/34/EU (ATEX) added	12/21/2015	05
Declaration of conformity renewed (without Draw-Wire)	05/31/2016	06
- Declaration of conformity TR-ECE-KE-DGB-0267: 88 series removed - Additional declaration of conformity TR-ECE-KE-GB-0344: 88 series + FS	07/20/2016	07
Declaration of conformity renewed	02/20/2018	08
- Declaration of conformity renewed - Type designation code, further series added	08/14/2020	09
- Safety-related incremental encoder AEV70I+FS (I_58 + FS) added - Declaration of conformity renewed - Declaration of conformity of AD*88 added with type A*V70	05/18/2021	10
- Certifications according to IECEx system - "X" requirements, such as ESD …	08/20/2021	11
Updating the declaration of conformity	03/02/2022	12
Additional information: Minimum cable length of 3 m	08/05/2022	13
Declaration of conformity TR-ECE-KE-GB-0344 renewed	11/10/2022	14
Declaration of conformity TR-ECE-KE-GB-0344 renewed	09/27/2023	15
Control line 64-200-164X replaced with 64-200-123X	10/09/2025	16

© TR-Electronic GmbH 2014, All Rights Reserved

1 General

This Ex-User manual contains all relevant explosion-safety information and includes the following topics:

- Basic safety instructions
- Intended use
- Product description
- Technical data
- Explosion protection characteristics
- Assembly

Since the documentation has a modular structure, this Ex-User manual represents a supplement to the other documentation such as for example product data sheets, dimensional drawings and leaflets etc.

The Ex-User manual is included, but can also be ordered separately.

1.1 Type designation code, rotary encoder with explosion protection enclosure

A	* 1	* 2	* 3	* 4	-	* 5	* 5	* 5	* 5	* 5

Position	Notation	Description
A	A	Explosion protection (ATEX, IECEx)
* 1	E O M D	Optical scanning unit ≤ 15 bit Optical scanning unit > 15 bit Magnetic scanning unit Redundant dual scanning unit
* 2	V S	Solid shaft Blind shaft
* 3	70 88	External diameter ∅ 70 mm External diameter ∅ 88 mm
* 4	S M I	Single turn Multi turn Incremental
* 5	-	Consecutive number

* = Wild cards

© TR-Electronic GmbH 2014, All Rights Reserved

1.2 Scope

This Ex-User manual applies exclusively to the rotary encoders with explosion protection enclosure of type **A**70*-******* and **A**88*-******* :

- Gas : **II 2G Ex db IIC T6 Gb**
- Dust : **II 2D Ex tb IIIC T80°C Db**

The products are labelled with affixed nameplates and are components of a system.

It thus applies together with the following documentation:

- the operator's system-specific operation instructions,
- this Ex-User manual
- and the interface-specific user manual
- optional: Safety Manual for safety-related applications

1.3 Relevant directives and standards

The rotary encoders with explosion protection enclosure were developed, constructed and finished under compliance with the applicable European- or International standards and directives.

EU-Directive 2014/30/EU	Electromagnetic compatibility
EU-Directive 2014/34/EU	Equipment and protective systems intended for use in potentially explosive atmospheres
EN 61000-6-2	EMC: Interference immunity
EN 61000-6-3	EMC: Interference emission
EN 60079-0 / IEC 60079-0	Explosive atmospheres: General requirements
EN 60079-1 / IEC 60079-1	Explosive atmospheres: Equipment protection by flameproof enclosures "d"
EN 60079-31 / IEC 60079-31	Explosive atmospheres: Equipment dust ignition protection by enclosure "t"
EN 60529	Degrees of protection provided by enclosures (IP code)

© TR-Electronic GmbH 2014, All Rights Reserved

1.4 Used abbreviations / Terms

A**70*	Rotary encoder with explosion protection enclosure ∅ 70 mm, all variants
A**88*	Rotary encoder with explosion protection enclosure ∅ 88 mm, all variants
CoC	***C***ertificate ***o***f ***C***onformity
EC	***E***uropean ***c***ommunity
EU	***E***uropean ***U***nion
EMC	***E***lectro***m***agnetic ***c***ompatibility
ESD	***E***lectro ***S***tatic ***D***ischarge
IEC	***I***nternational ***E***lectro-technical ***C***ommission
IECEx	***I***nternational ***E***lectro-technical ***C***ommission IEC certification system for potentially explosive areas
VDE	Association for Electrical, Electronic & Information Technologies

1.5 Product description

The rotary encoder type A**70* or A**88*, consisting of an aluminum or stainless steel explosion protection enclosure with built-in systems and integrated evaluation electronics, is used for the detection of angular changes for fixed installations. The changes in angle are transmitted to the evaluation electronics via shaft.

The explosion protection enclosure is encapsulated in a pressure-tight manner and thus prevents any possible explosion within the enclosure from being transferred to the potentially explosive atmosphere surrounding the enclosure.
Through its manner of construction and pressure-tight casing, the enclosure is suitable for the incorporation of non-explosion protected installation devices (rotary encoder).

The construction, as well as the interaction of the individual components and the housing variants with regards to their possibilities for use in potentially explosive areas, are tested by the company TR-Electronic GmbH and confirmed by identification with the nameplate.

© TR-Electronic GmbH 2014, All Rights Reserved

2 Basic safety instructions

2.1 Symbol- and note definition

⚠ WARNING	means that death or serious injury can occur if the required precautions are not met.
⚠ CAUTION	means that minor injuries can occur if the required precautions are not met.
NOTICE	means that damage to property can occur if the required precautions are not met.
	indicates important information or features and application tips for the product used.
	signifies that respective ESD-safety measures according to DIN EN 61340-5-1 supplement 1 are to be observed.

© TR-Electronic GmbH 2014, All Rights Reserved

2.2 Obligation of the operator prior to commissioning

As an electronic device and for use in potentially explosive areas, the explosion protection enclosure with integrated measuring system is subject to the provisions of the EU-directives EMC and ATEX.

Therefore, commissioning of the device is only allowed once it has been established that the system/machine in which the device is to be installed, complies with the provisions of the EU-directives EMC and ATEX, the harmonized standards, European standards or the respective national standards.

For use in potentially explosive atmospheres outside the European single market (EU), the device has an approval according to the IECEx system. The corresponding national standards and international standards (IECEx) must therefore be observed during commissioning.

2.3 General dangers with the use of this product

The product, hereafter referred to as ***equipment*** is manufactured using the latest technology and according to recognized safety regulations. ***Nevertheless, non-intended use can cause danger to life and limb of the user or third parties or cause damage to the equipment and other property!***

Only use the equipment for its intended use, with safety- and danger awareness and in compliance with the Ex-***user manual*** and the ***interface specific user manual***!

The operator of an electrical system in a potentially explosive environment should keep the equipment in a proper condition, it should be properly operated and monitored and maintenance- as well as repairs are to be performed. This also includes inspection of the equipment for possible transport damage prior to commissioning.
De-energize the system before carrying out wiring work or opening and closing electrical connections. The equipment may not be used in case of defects, as a basic principle it may not be opened and dust deposits > 5 mm must be removed.

© TR-Electronic GmbH 2014, All Rights Reserved

2.4 Intended use

The equipment is used for the detection of angular movements as well as the processing of the measurement data for a downstream control through industrial process- and control procedures.

The equipment is a fixed-installation device for use in the Ex-Zone 1 (potentially gas-explosive areas, II 2 G, device protection level Gb) or 21 (areas with combustible dust II 2 D, device protection level Db).

The assembly takes place through the established attachment possibilities. The electrical data provided on the nameplate, as well as the device category, temperature class etc. for the place of use are to be observed. The operating temperature range of the equipment is -20°C to +60°C.

Intended use also includes:

- observation of all instructions contained in this Ex-User manual and in the interface-specific user manual,
- observation of the nameplate, type examination certificate, certificate of conformity (IECEx CoC) and possible prohibition- or instruction labels on the equipment,
- observation of the supplementary documentation e.g. the accompanying product sheet, connector assignments etc.,
- observation of the machine- or system manufacturer's operating manual,
- operating of the equipment within the limits indicated in the technical data (Ex-User manual/interface-specific user manual).

2.5 Non-intended use

WARNING

Risk of death, bodily injury or damage resulting from non-intended use of the equipment!

NOTICE

- Since the equipment is ***not a safety component*** according to the EC-machine directive, a plausibility test of the measuring-system-values has to be performed through the downstream control.
- It is compulsory for the operator to incorporate the equipment into their own safety system.
- The following uses are especially prohibited:
  - in environments with an explosive atmosphere of the Zones 0 and 20
  - for medical aims
  - commissioning of the equipment if the nameplate is no longer readable or is completely missing.

© TR-Electronic GmbH 2014, All Rights Reserved

2.6 Usage in safety-related applications

For usage in safety-related applications the safety measuring system is installed into the explosion protective enclosure.

The products are labeled with an additional safety marking on the nameplate:
SIL…, PL…, Kat…

The "Intended use", as well as all information for safe usage of the safety measuring system in safety-related applications are contained in the safety manual.

The safety measuring system built-in into the explosion protection enclosure can therefore be used for safety-related applications in explosive atmospheres.

As a result of the usage in safety-related applications additional requirements arise in relation to the assembly of the measuring system (fault exclusion).

These additional assembly requirements are component of the safety manual and must be taken into account. In general, the requirements and acceptance conditions for the complete system must be taken into account for mounting.

© TR-Electronic GmbH 2014, All Rights Reserved

2.7 Warranty and liability

The "General terms and conditions" ("Allgemeine Geschäftsbedingungen") of the company TR-Electronic GmbH apply in general. This will be available to the operator with the contract confirmation or –conclusion at the latest. Warranty- or liability claims with regards to personal- and property damage are excluded, if they are the result of one or more of the following causes:

- Non-intended use of the equipment.
- Improper assembly, installation, commissioning, programming, maintenance or dismantling of the equipment.
- Improperly executed work on the equipment by unqualified personnel.
- Operating of the equipment in the presence of technical defects.
- The performance of unauthorized mechanical or electrical modifications of the equipment.
- The performance of unauthorized repairs
- Catastrophic incidents caused by external forces or acts of God.

2.8 Organizational measures

- The Ex-User manual must always be kept within reach in the equipment's operating location.
- In addition to the Ex-User manual, the generally applicable legal regulations and other mandatory directives for work safety, accident prevention and environmental conservation are to be observed and conveyed.
- The applicable national-, site- and system-specific provisions and requirements are to be observed and conveyed.
- The operator has the obligation to point out any special operational features and requirements to the personnel.
- Before starting work, the personnel responsible for work on or with the equipment must have read and understood the Ex-User manual, in particular the chapter on "Basic safety instructions".
- The nameplate and possible affixed prohibition- or instruction labels on the equipment must be kept in a readable condition.
- Do not perform any mechanical or electrical modifications to the equipment, except those which are specifically described in this Ex-User manual.
- Repairs may only be performed by the manufacturer, or by a person or body who carries the manufacturer's authorization.

© TR-Electronic GmbH 2014, All Rights Reserved

2.9 Personnel selection and -qualification; basic obligations

2.9.1 Electrical installations design, device selection and erection

The project development of electrical systems, the selection of the devices and the installation in potentially explosive atmospheres may only be performed by persons whose training includes instruction in various types of ignition and installation techniques, applicable regulations and prescriptions as well as general principles of the Zone-classification. The persons must have the relevant competence for the type of work to be performed.

The personnel must regularly undergo corresponding further training or courses.

For definitions on the knowledge, expertise and competence of the "responsible persons", "manual workers" and "planners", the EN/IEC 60079-14 standard is to be additionally consulted [suppliers e.g. Beuth Verlag GmbH, VDE-Verlag GmbH].

2.9.2 Inspection, maintenance and repair

The inspection, maintenance and repair of electrical systems in potentially explosive environments may only be performed by experienced personnel who have also gained knowledge on the various types of ignition and installation procedures, the requirements of the EN/IEC 60079-17 standard, relevant national provisions and company regulations for the system as well as on the general principles of the Zone-classification during their training.

Personnel are to undergo appropriate further training or instruction regularly. Proof of the relevant experience and completed training must be available.

For definitions on the knowledge, expertise and competence of the "responsible persons", "expert person with leadership functions" and the "performing personnel", the EN/IEC 60079-17 standard is to be additionally consulted [suppliers e.g. Beuth Verlag GmbH, VDE-Verlag GmbH].

© TR-Electronic GmbH 2014, All Rights Reserved

2.10 First commissioning / Commissioning

Prior to the first commissioning the equipment is to be checked regarding its suitability in the respective zone according to its labeling. The values indicated on the nameplate are not to be exceeded. With use of the equipment in areas which are potentially explosive because of dust, a deposit of dust on the top-side which is more than 5 mm thick is not permissible. Here the installation of an additional covering may be required in circumstances where the deposit of dust cannot be reliably avoided.

The operational safety of the equipment and the correct functional arrangement of the equipment inside the plant must be checked before commissioning. It may only be used in a clean and undamaged condition.

2.11 Assembly, installation and dismantling

With installation and operation of the explosion protective equipment, one should consider protection against hazardous environmental influences which limit the intended use of the equipment. This could be protection against aggressive fluids or weather protection for example. During installation, the EN/IEC 60079-14 as well as other national standards and regulations applicable at the installation site are to be adhered to.

The information on the nameplate and in the type examination certificate must be complied with.

The assembly of the equipment takes place according to the enclosure's established mounting possibilities, but impacts on the shaft such as from hammer blows are to be avoided.
When bolts are screwed into the drilled blind holes, at least one thread winding is to remain free at the drill base.

In potentially explosive areas the equipment's power supply line is to be routed in such a way that it is protected from damage and mechanical failure. The individual wires must not be damaged. The maximum connection information on the nameplate must be complied with.
The instructions for connecting the free supply line end are to be adhered to, see chapter " Special conditions for safe use, marking "X" " on page 17.

For metal enclosures in potentially explosive areas an equipotential line with at least 4 mm^2 is required.

Wiring work, opening and closing of electrical connections may only be performed with the power switched off.
Do not perform any welding work once the equipment has already been wired and switched on.

Touching the equipment-connection contacts with bare hands is to be avoided, or the respective ESD-protective measures are to be implemented.

© TR-Electronic GmbH 2014, All Rights Reserved

2.12 Inspection, maintenance and repair

The operator of an electrical system in a potentially explosive environment must keep the equipment in a good condition, operate it properly, monitor it and maintenance and repair work must be performed, also see EN/IEC 60079-17 in this respect.

Maintenance work and defect repairs may only be performed by trained professionals. Before the maintenance or repair, the specified safety precautions are to be observed. The warning notes on the equipment and in the Ex-User manual and the interface-specific user manual are to be adhered to!
The applicable laws and directives are complied with before recommissioning.

The existing thread pitches must be protected. They may not be subsequently modified or painted.
The replacement of defective parts of the pressure-tight casing may only be performed by the manufacturer.

- ➢ The equipment does not require any maintenance by the operator. Nevertheless, inspections must be performed at regular intervals:
  - Visual inspection
    - of the thread pitches
    - of the pressure-tight casing for damages
    - of the cables for external damages
    - for dust deposits
  - Checking of the cable entry for a tight fit
- ➢ In case of damages, the equipment is to be taken out of service immediately and to be repaired by the manufacturer!
- ➢ The general instructions for repairs are to be adhered to, see the chapter " Special conditions for safe use, marking "X" " on page 17.

© TR-Electronic GmbH 2014, All Rights Reserved

2.13 Special conditions for safe use, marking "X"

The "X"-symbol in the certificate numbers:
“IBExU 11 ATEX 1125 **X**” and “IECEx IBE 21.0025 **X**” are used to indicate special conditions for use:

Contrary to the passage in the certificates:

> "Repairs of the flameproof joints must be made in compliance with the constructive specifications provided by the manufacturer. Repairs must not be made on the basis of values specified in tables 3 and 4 of EN/IEC 60079-1."

any type of repair to the equipment is prohibited. The repair of the flameproof joints is an option which is not currently provided for.

- The connection of the free end of the supply line must either take place outside of the potentially explosive area or within of an equipment which is permitted for the respective device category.

- To avoid electrostatic charges, strong charge-generating processes, such as particles moving rapidly along a surface, pneumatic transport of dust and the spraying of charges during an electrostatic coating process, must be excluded when using the equipment in potentially explosive atmospheres.

© TR-Electronic GmbH 2014, All Rights Reserved

3 Transport / Storage

Transport – instructions

Do not drop the device or allow hard impacts!

Only use the original packaging!
Inappropriate packaging material may cause damage to the device during transport.

Storage

Storage temperature: -30 to +80°C
Store in a dry place

© TR-Electronic GmbH 2014, All Rights Reserved

4 Technical data

4.1 Power supply

Nominal Voltage ..... 24 V DC

Power consumption

Stainless steel design..... A**70: ≤ 2.3 W; A**88: ≤ 4.0 W

Aluminum design..... A**70: ≤ 3.0 W; A**88: ≤ 6.0 W

Rated Voltage..... ≤ 60 V

4.2 Mechanical characteristics

Mechanically permissible speed..... ≤ 6000 min^{-1}

Shaft load, at the shaft end..... ≤ 40 N axial, ≤ 60 N radial

Bearing life time..... ≥ 3.68 * 10^{10} revolutions at

Speed ..... ≤ 3000 min^{-1}

Operating temperature ..... ≤ 60 °C

Shaft load, at the shaft end ..... ≤ 20 N axial, ≤ 30 N radial

4.3 Environmental conditions

Vibration, DIN EN 60068-2-6 ..... ≤ 100 m/s^2, sine 50-2000 Hz

Shock, DIN EN 60068-2-27 ..... ≤ 1000 m/s^2, half-sine 11ms

EMC

Immunity to disturbance, DIN EN 61000-6-2

Transient emissions, DIN EN 61000-6-3

Working temperature ..... -20 °C…+60 °C

with PROFIBUS ECOFAST Hybrid Cable..... -20 °C…+40 °C

Storage temperature ..... -30 °C…+80 °C, dry

Relative humidity, DIN EN 60068-3-4..... 98 %, non-condensing

Protection class, DIN EN 60529 ..... IP 65

Optional with shaft sealing ring ..... IP 67

© TR-Electronic GmbH 2014, All Rights Reserved

4.4 Enclosure materials

Aluminum design

Enclosure- / flange-material ..... EN AW-AlCu6BiPb

Outer surface, powder-coated..... red RAL3013, semi-gloss

Stainless steel design

Enclosure- / flange-material ..... WN 1.4404, corrosion resistant

Shaft, stainless steel ..... WN 1.4305, corrosion resistant

© TR-Electronic GmbH 2014, All Rights Reserved

4.5 Cable specifications

The connection cable is an integral part of the equipment and cannot be freely selected. It is to be verified whether the cable meets the specific usage requirements according to the provided cable parameters.

In compliance with EN/IEC 60079-14, chapter 10.6.2, **Version b)** a minimum cable length of 3 m is required.

The minimum length is required to prevent flame propagation to the external environment through the cable.

4.5.1 Cable type “PROFIBUS ECOFAST Hybrid Cable” with 4x1.5+2x0.64 mm²

Parameters	Description	Product image
TR Article-No.:	64-200-156X	
Damping ratio per length - at 9.6 kHz / maximal - at 38.4 kHz / maximal - at 4 MHz / maximal - at 16 MHz / maximal	 0.0030 dB/m 0.0040 dB/m 0.025 dB/m 0.049 dB/m	
Surge impedance	150 Ω ±10% at 3...20 MHz	
Loop impedance	138 Ω/km	
Screen resistance	15 Ω/km	
Capacity	30 pF/m at 1 kHz	
Wire diameter, electric wires	1.5 mm²	
Conductor diameter	2.56 mm	
Cable diameter	11 mm ±0.3 mm	
Conductor insulation	PE	
Sheath	PUR	
Bending radius, in motion	≥ 7.5x Outside diameter	
Number of bending cycles	5000000 at 2.5 m/s²	
Tensile load	≤ 300 N	
Weight	150 kg/km	
Temperature range	-40…+60 °C	
Type of protection IP	IP 65	
Flammability	Flame resistant, IEC 60332-1	
Resistance against - Petroleum - Grease	conditionally resistant	
Resistance against - UV-radiation	conditionally resistant	
Product properties	halogen-, silicon free	

© TR-Electronic GmbH 2014, All Rights Reserved

4.5.2 Cable type „KT-LIYC11Y control cable" with 1x(2x0,5 mm² Y) + 14x0,25 mm²

Parameters	Description
TR Article-No.:	64-200-123X
Tension element 2x 0.5 mm²	
Stranded	CU-ETP1; 16 x 0.20 mm bare
Wire insulation	PVC; ∅ nominal 1.9 mm
Conductor colors	white, brown
Conductor identification	DIN EN 13602
Stranding	2 wires Filler + foil (non-hygroscopic)
Intermediate sheath	PVC; gray (similar to RAL 7001); ∅ nominal 5.0 mm
Signal wires 16x 0.25 mm²	
Strand	CU-ETP1; 14 x 0.15 mm bare
Conductor insulation	PVC; ∅ nominal 1.3 mm
Conductor colors	green, yellow, gray, pink, blue, red, black, violet, gray/pink, red/blue, white/green, brown/green, white/yellow, yellow/brown (2-color ring marked)
Conductor identification	DIN EN 13602
Stranding	14 x 0.25 mm² twisted together around core element Filler + Polyester foil (non-hygroscopic)
Shield	Tinned copper braid, approx. 85% opt. density
Banding	Fleece
Outer sheath	
End jacket	PUR, halogen-free, flame-retardant, hydrolysis-resistant
Outer diameter	10.3 ± 0.6 mm
Sheath color	gray, similar to RAL 7001
Technical data	
Conductor resistance 0.25	max. 77.8 Ω/km
Conductor resistance 0.5	max. 39.0 Ω/km
Nominal voltage	240 V
Test voltage	1.2 kV
Temperature range when moving	- 5 °C to +70 °C
Temperature range fixed	-40 °C to +80 °C
Oil resistance	according to EN 60811-2-1
Flame resistance	according to IEC 60332-1-2
Capacitance A/A	< 250 pF/m
Capacitance A/C	< 200 pF/m
Inductance	< 1 µH/m

© TR-Electronic GmbH 2014, All Rights Reserved

4.5.3 Cable type “Ethernet Hybrid Cable” with 2x2x22 AWG + 3x2x0.18 + 2x1.0 mm²

Parameter	Description	Structure
TR Article-No.	64-200-223X	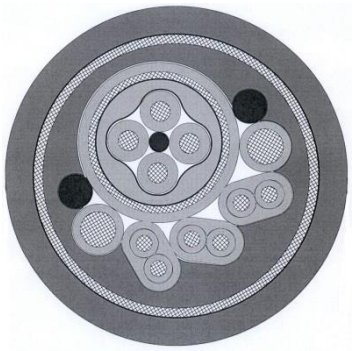
Conductor		
2x 2x22 AWG	Cu tinned, finely stranded	
3x 2x0.18 mm²	Cu tinned, finely stranded	
2x1.0 mm²	Cu bare, finely stranded	
Isolation		
22 AWG	SABIX	
0.18 mm²	TPE	
1.0 mm²	TPE	
Color coding		
22 AWG	white/green, white/orange, green, orange	
0.18 mm²	white, brown, blue, yellow, gray, pink	
1.0 mm²	red, black	
Outer sheath / outer Shielding		
Material	TPE-U	
Color	green, similar to RAL6018	
Shield	Cu-wired, tinned	
Wrapping	Fleece	
Specifications		
Outer diameter	12.8…13.5 mm	
Weight	approx. 216 kg/km	
DC resistance at 20 °C	22 AWG: ≤ 58.8 Ω/km	
	1.0 mm²: ≤ 19.5 Ω/km	
	0.18 mm²: ≤ 111 Ω/km	
Operation peak voltage	300 V	
Test AC voltage	2 kV, 1 min	
Temperature range, in motion	-30…+80 °C	
Temperature range, at rest	-40…+80 °C	
Bending radius, fixed installation	> 5x outside diameter	
Bending radius, in motion	> 12x outside diameter	

© TR-Electronic GmbH 2014, All Rights Reserved

4.6 Explosion protection characteristics

The conformity assessment procedure, with quality assurance of production / product according to the ATEX directive 2014/34/EU, takes place with the participation of the notified body:

CE 0123, TÜV SÜD Product Service GmbH,
Gottlieb-Daimler-Strasse 7,
70794 Filderstadt
Certificate QS product ("2G…d", "2D…t"): EX3A 18 07 34446 005

4.6.1 Ex-labeling, gas

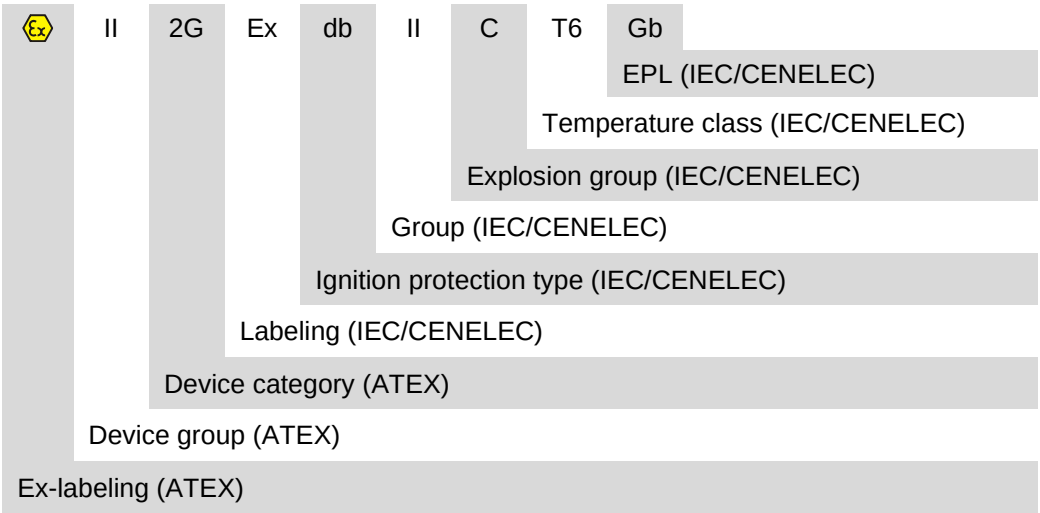

Device group ..... **II**: on the surface applications

Device category ..... **2G**: Zone 1
adequate safety in case of predictable failures

Ignition protection type..... **db**: flameproof enclosure
no ignition of the external ex-atmosphere

Group ..... **II**: potentially gas-explosive areas

Explosion group ..... **C**: typical gas: Hydrogen, acetylene

Temperature class..... max. enclosure surface-temperature
T6 ..... ≤ 85 °C

EPL (Device protection level**)** ... **G "b" (Zone 1):**
adequate safety in case of predictable failures

© TR-Electronic GmbH 2014, All Rights Reserved

4.6.2 Ex-labeling, dust

Ex	II	2D	Ex	tb	III	C	T80°C	Db
								EPL (IEC/CENELEC)
							max. surface temperature	
						Explosion group (IEC/CENELEC)		
					Group (IEC/CENELEC)			
				Ignition protection type (IEC/CENELEC)				
			Labeling (IEC/CENELEC)					
		Device category (ATEX)						
	Device group (ATEX)							
Ex-labeling (ATEX)								

Device group ..... **II**: on the surface applications

Device category ..... **2D**: Zone 21
adequate safety in case of predictable failures

Ignition protection type..... **tb**: Protection by enclosure
Ex-Atmosphere is kept away from the ignition source

Group ..... **III**: potentially dust-explosive areas

Explosion group ..... **C**: Type of dust: conductive dust

Temperature ..... max. enclosure surface-temperature
T80°C ..... ≤ 80 °C

EPL (Device protection level**)** ... **D "b" (Zone 21):**
adequate safety in case of predictable failures

© TR-Electronic GmbH 2014, All Rights Reserved

5 Assembly

WARNING

NOTICE

Danger of explosion through the use of couplings which are not suitable for use in potentially explosive areas!

- Only couplings may be used which are approved for use in potentially explosive areas and which meet the requirements of the defined characteristics, see the chapter “Technical data”, as from page 19.
- Adhere to the assembly and operating instructions of the manufacturer.

- ➢ Observe references of the “Assembly, installation and dismantling” chapter, see page 15
- ➢ Dimensions and requirements to the customer shaft must be taken from the customer-specific drawing
- ➢ Tolerance specifications of the coupling manufacturer are to be adhered to

5.1 Safety-related applications

The assembly in safety-related applications is to be made in accordance with the Safety Manual, see chapter “Usage in safety-related applications” on page 12.

© TR-Electronic GmbH 2014, All Rights Reserved

5.2 NON safety-related applications

5.2.1 Solid shaft

The equipment with solid shaft is connected to the drive shaft via an elastic coupling. Deviations in axial and radial direction between the equipment and drive shaft are absorbed by means of the coupling. This avoids excessive loads.

5.2.1.1 Flange-assembly

The centering collar with proper fit assures the centering of the shaft. Attachment to the machine takes place via bolts in the flange.

1: EX-conformant coupling
2: Machine
3: Centering collar

Principle

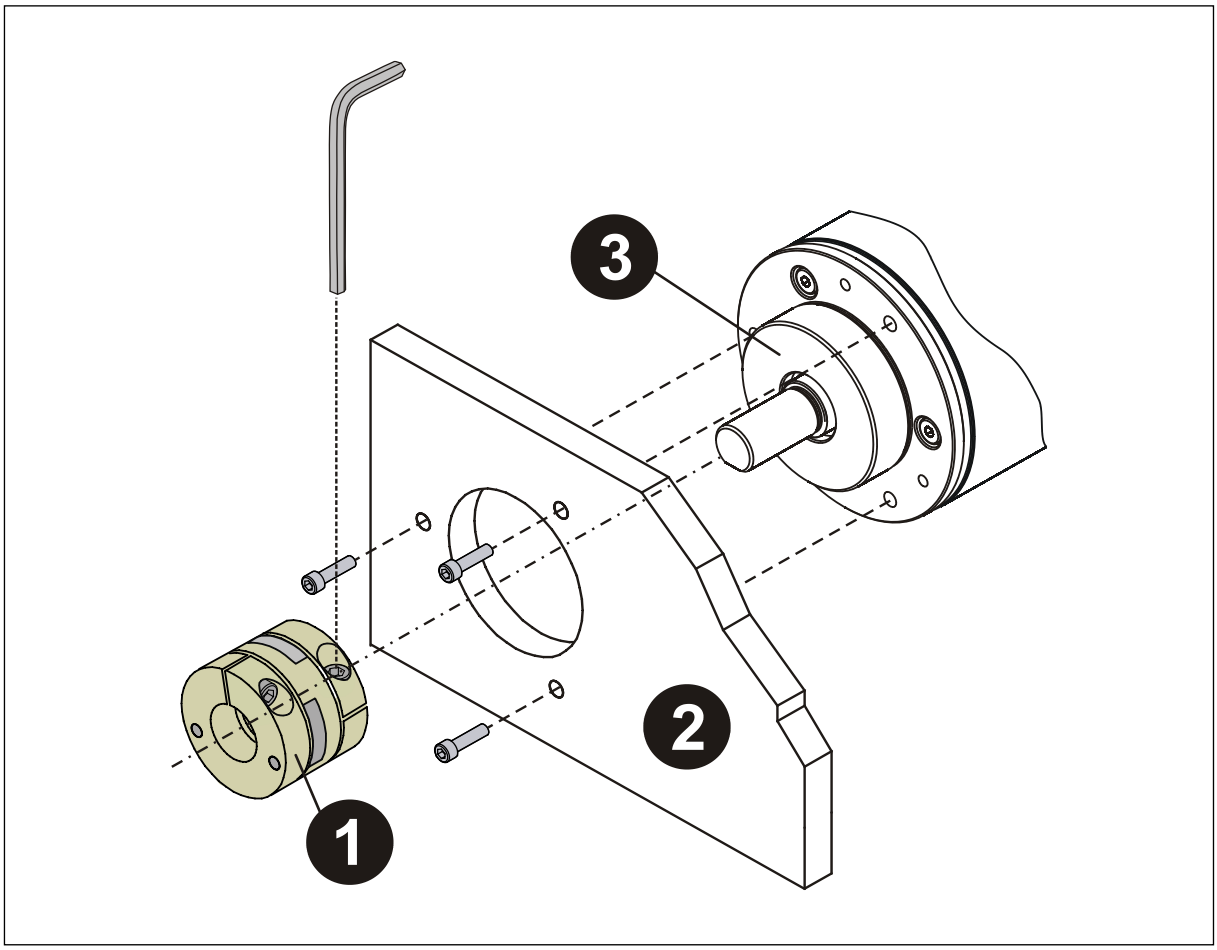

Figure 1: Flange-assembly

© TR-Electronic GmbH 2014, All Rights Reserved

5.2.1.2 Clamp flange - assembly

The centering collar with proper fit assures the centering of the shaft. Attachment to the machine takes place via a clamp flange.

1: EX-conformant coupling
2: Clamp flange
3: Centering collar

Principle

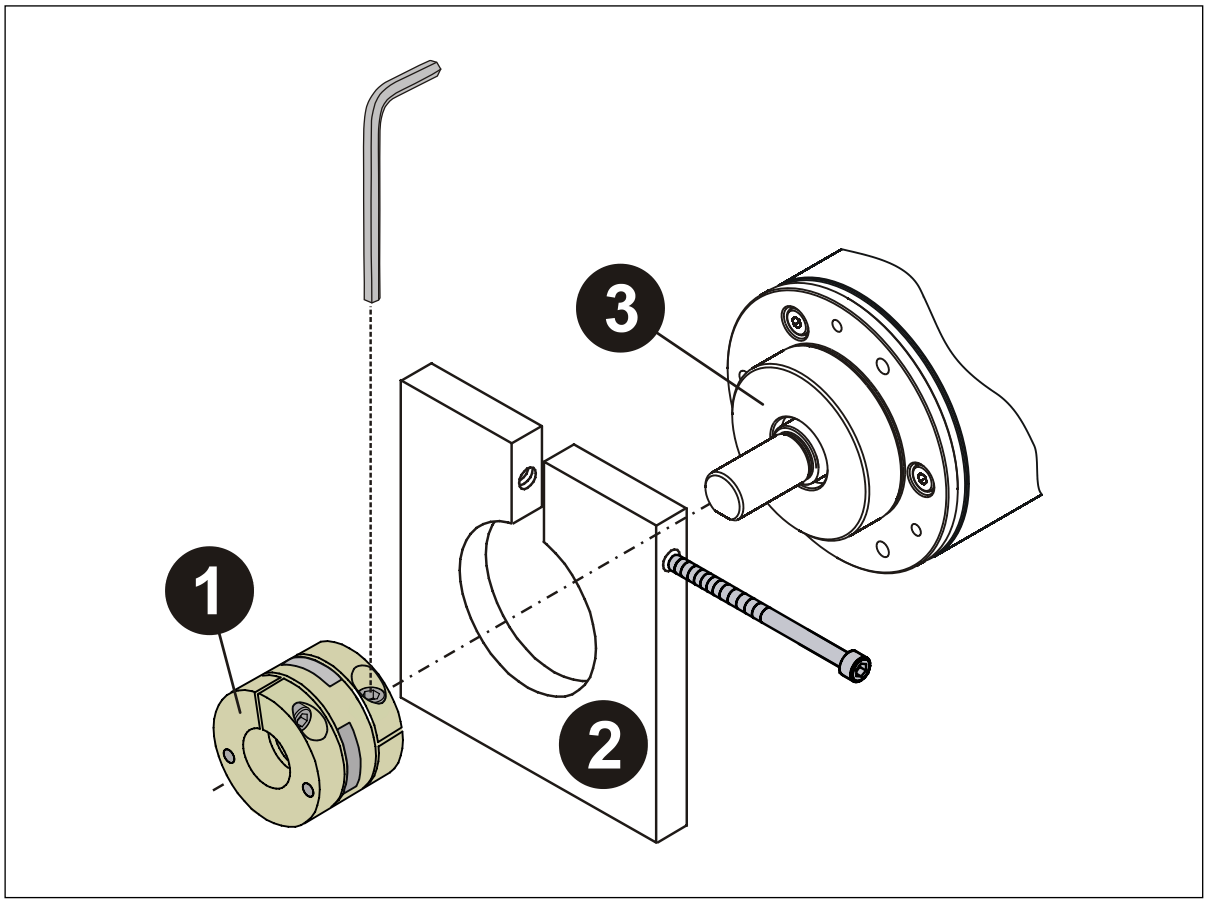

Figure 2: Clamp flange - assembly

© TR-Electronic GmbH 2014, All Rights Reserved

5.2.1.3 Fixing clamps - assembly

The centering collar with proper fit assures the centering of the shaft. Attachment to the machine takes place via 2 fixing clamps, which are mounted with 4 bolts.

1: EX-conformant coupling
2: Machine
3: Centering collar
4: Fixing clamps, 2x

Principle

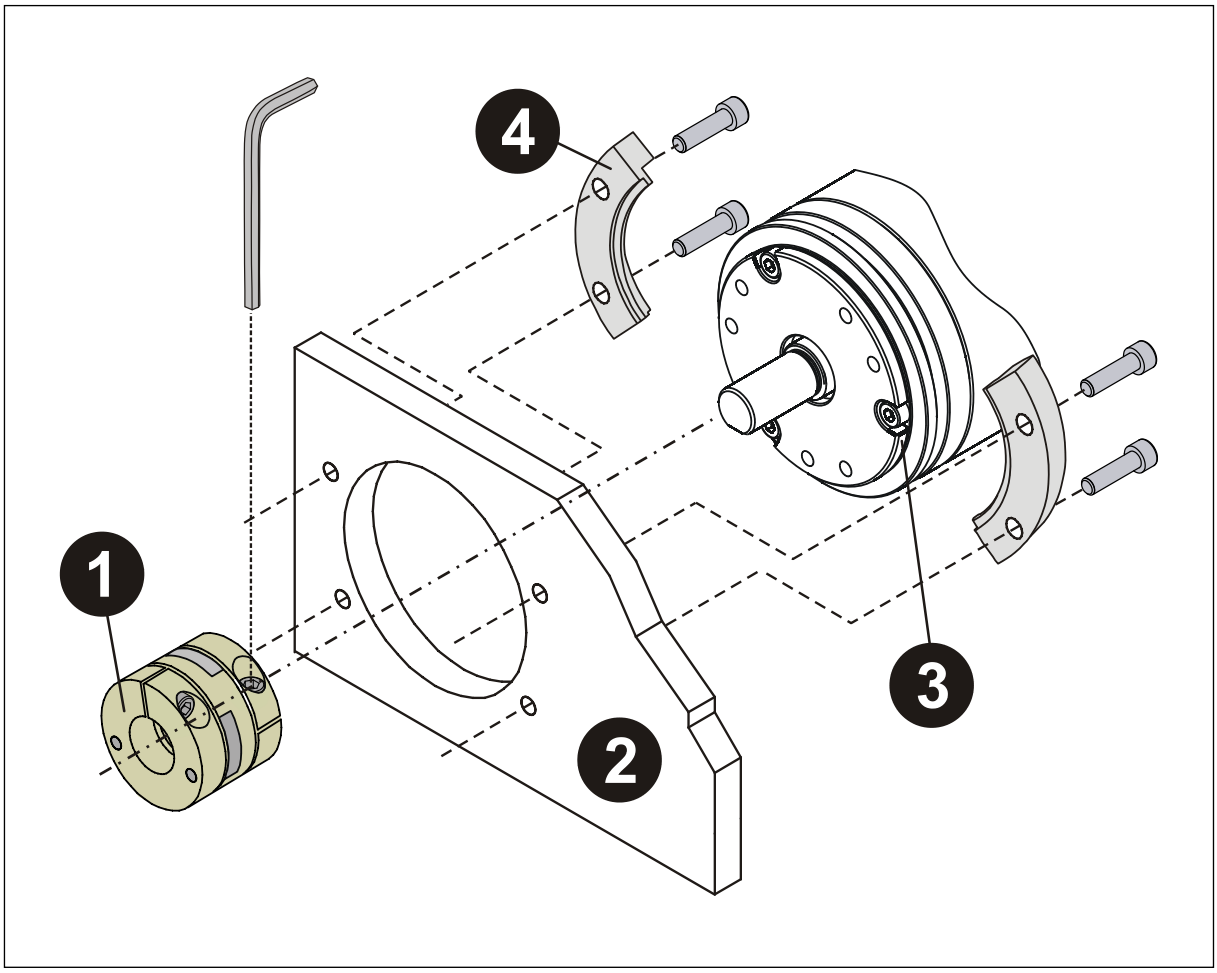

Figure 3: Fixing clamps - assembly

© TR-Electronic GmbH 2014, All Rights Reserved

5.2.1.4 Servo clamps - assembly

The centering collar with proper fit assures the centering of the shaft. Attachment to the machine takes place via three servo clamps

1: EX-conformant coupling
2: Machine
3: Centering collar
4: Servo clamps, 3x

Principle

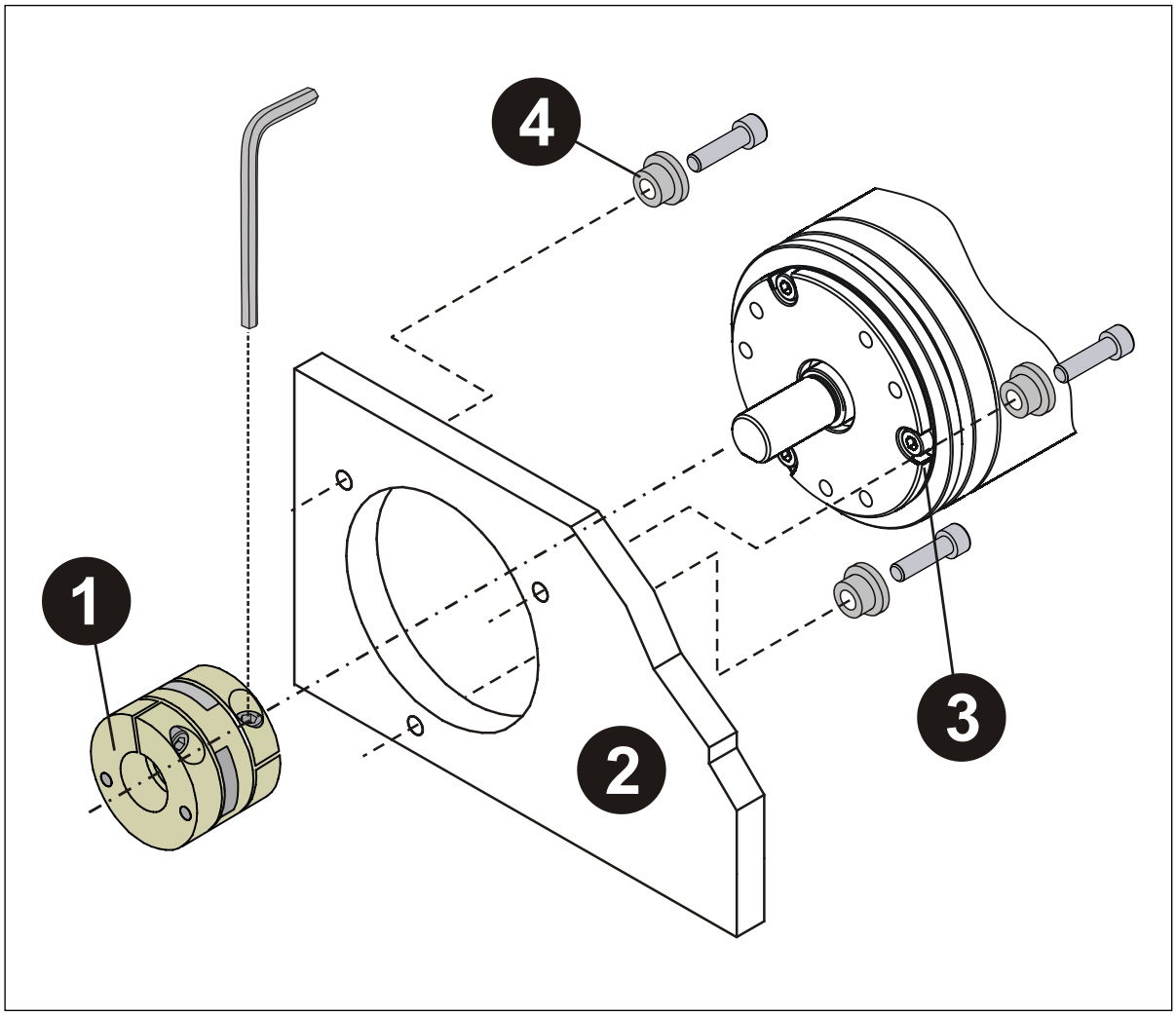

Figure 4: Servo clamps - assembly

© TR-Electronic GmbH 2014, All Rights Reserved

5.2.2 Blind shaft

5.2.2.1 Dowel pin-Groove – assembly

Simultaneous rotation of the measuring system, caused by the developing torque, is prevented by a dowel pin on the drive side. For mounting the dowel pin the measuring system has a groove insertion 4K7, 6mm deep on the side of the flange. The dowel pin must extend at least 4 mm into the groove insertion.

The measuring system is protected against slipping on the shaft by tightening the clamping ring with the Allen wrench.

1: Drive
2: Dowel pin
3: Groove insertion
4: Clamping ring

Principle

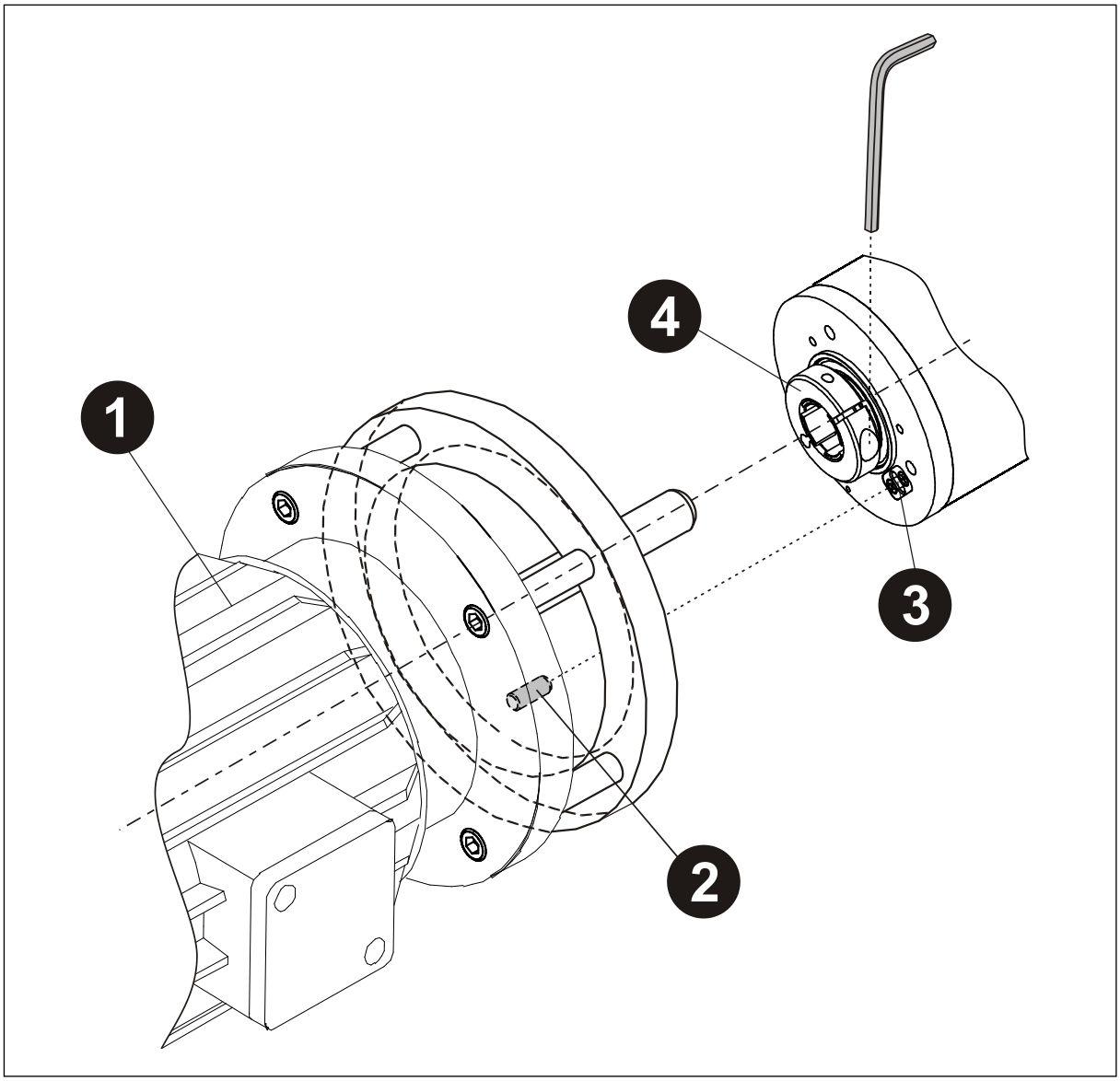

Figure 5: Dowel pin-Groove - assembly

© TR-Electronic GmbH 2014, All Rights Reserved

6 Equipotential bonding conductor - Connection

An equipotential is required for systems in potentially explosive areas. This is to be done with a minimum wire diameter of 4 mm^2.

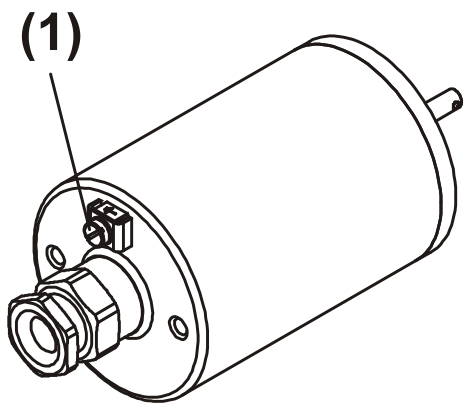

(1): Connection for equipotential bonding conductor, corrosion-resistant

Consisting of lug, locking element and screw

Figure 6: Equipotential bonding conductor - Connection

7 Disposal

Electronic waste is hazardous waste. The applicable country-specific regulations are to be adhered to for disposal.

© TR-Electronic GmbH 2014, All Rights Reserved

8 Annex

8.1 ATEX certificate

IBExU Institut für Sicherheitstechnik GmbH
An-Institut der TU Bergakademie Freiberg

[1] **EU-TYPE EXAMINATION CERTIFICATE** - TRANSLATION

[2] Equipment and protective systems intended for use in potentially explosive atmospheres, directive 2014/34/EU

[3] EU-Type Examination Certificate Number **IBExU11ATEX1125 X** | Issue 1

[4] Equipment: **Rotary encoder**
Type A**70*-***** and A**88*-*****

[5] Manufacturer: TR-Electronic GmbH

[6] Address: Eglishalde 6
78647 Trossingen
GERMANY

[7] This product and any acceptable variation thereto are specified in the schedule to this certificate and the documents therein referred to.

[8] IBExU Institut für Sicherheitstechnik GmbH, Notified Body number 0637 in accordance with Article 17 of Directive 2014/34/EU of the European Parliament and of the Council, dated 26 February 2014, certifies that this product has been found to comply with the essential health and safety requirements relating to the design and construction of products intended for use in potentially explosive atmospheres given in Annex II to the Directive.

The examination and test results are recorded in the confidential test report IB-21-3-0093.

[9] Compliance with the essential health and safety requirements has been assured by compliance with:
EN IEC 60079-0:2018/AC:2020-02 EN 60079-1:2014/AC:2018-09 EN 60079-31:2014
Except in respect of those requirements listed at item [18] of the schedule.

[10] The sign "X" placed after the certificate number indicates that the product is subject to the specific conditions of use specified in the schedule to this certificate.

[11] This EU-type examination certificate relates only to the design and construction of the specified product. Further requirements of the Directive apply to the manufacturing process and supply of this product. These are not covered by this certificate.

[12] The marking of the product shall include the following:

Ⓔx II 2G Ex db IIC T6 Gb **Ⓔx II 2D Ex tb IIIC T80 °C Db**

IBExU Institut für Sicherheitstechnik GmbH
Fuchsmühlenweg 7
09599 Freiberg, GERMANY

Phone: +49 (0)3731 3805-0
Fax: +49 (0)3731 3805-10

By order

Dipl.-Ing. (FH) Henker

Zertifizierungsstelle Explosionsschutz IBExU Institut für Sicherheitstechnik GmbH Kennzeichen 0637
- Seal -
(Notified Body number 0637)

Certificates without seal and signature are not valid. Certificates may only be duplicated completely and unchanged. In case of dispute, the German text shall prevail.

Freiberg, 2021-10-11

FB106100 | 1

Page 1/2
IBExU11ATEX1125 X | 1

TR-ECE-TI-GB-0219-02

© TR-Electronic GmbH 2014, All Rights Reserved

IBExU Institut für Sicherheitstechnik GmbH
An-Institut der TU Bergakademie Freiberg

[13] **Schedule**

[14] **Certificate number IBExU11ATEX1125 X** | Issue 1

[15] **Description of product**
The Rotary encoder type A**70*-***** and A**88*-***** is used with built-in systems to record angle modifications for the stationary use in explosive gas and dust atmospheres in the equipment categories 2G and 2D. It consists of a flameproof enclosure from stainless steel or aluminium, into which the evaluation electronic is placed to record the position variation. The signal of the position respectively angle modification is transmitted by beared shaft (encoder).

Technical data:

– Nominal voltage:	11 up to 27 V DC
– max. power input:	2.3 W (A**70*-*****, variant stainless steel)
	3 W (A**70*-*****, variant aluminium)
	4 W (A**88*-*****, variant stainless steel)
	6 W (A**88*-*****, variant aluminium)
– max. Speed:	6000 min^{-1}
– Ambient temperature range:	-20 °C up to +60 °C
– IP-Degree of protection according to EN 60529:	IP66

Changes compared to issue 0 of this certificate and additions thereof:
- The encoder complies with the requirements of the current standard editions of EN 60079 and is marked with the equipment protection level.
- IP-Degree of protection is IP66.
- Qualification of a new label material.

[16] **Test report**
The test results are recorded in the confidential test report IB-21-3-0093 of 2021-10-08.
The test documents are part of the test report and they are listed there.

Summary of the test results
The Rotary encoder type A**70*-***** and A**88*-***** fulfils the requirements of the explosion protection for equipment of group II, category 2G in the type of protection flameproof enclosure "db" as well as group II, category 2D in type of protection dust explosion protection by enclosure "tb".

[17] **Special conditions for use**
- Repairs of the flameproof joints must be made in compliance with the constructive specifications provided by the manufacturer. Repairs must not be made on the basis of values specified in table 3 and 4 of EN 60079-1.
- High charging processes have to be avoided at use in explosive dust atmospheres.

[18] **Essential Health and Safety Requirements**
In addition to the essential health and safety requirements (EHSRs) covered by the standards listed at item [9], the following are considered relevant to this product, and conformity is demonstrated in the test report:
- not applicable -

[19] **Drawings and documents**
The documents are listed in the test report.

IBExU Institut für Sicherheitstechnik GmbH
Fuchsmühlenweg 7
09599 Freiberg, GERMANY

By order.
Dipl.-Ing. (FH) Henker

Freiberg, 2021-10-11

FB106100 | 1

Page 2/2
IBExU11ATEX1125 X | 1

TR-ECE-TI-GB-0219-02

© TR-Electronic GmbH 2014, All Rights Reserved

8.2 EU declaration of conformity, A**70

TR electronic

EU Declaration of Conformity

The Rotative Measuring System A*V70 with "TR-Explosion Protection Enclosure"

Type: AEV70, AMV70, AOV70
Order-No.: A**70*-*****

was developed, designed and manufactured to comply with the EU-Directives

Electromagnetic Compatibility	**2014/30/EU**	(L 96/79)
Equipment and protective systems intended for use in potentially explosive atmospheres	**2014/34/EU**	(L 96/309)
Restriction of the use of certain hazardous substances in electrical and electronic equipment (RoHS)	**2011/65/EU**	(L 174/88)

under the sole responsibility of
TR-Electronic GmbH
Eglishalde 6
D - 78647 Trossingen
Tel.: +49 7425/228-0
Fax: +49 7425/228-33
Germany

The following harmonized standards were applied:

EN 61000-6-2: 2005/AC:2005	Generic standards - Electromagnetic compatibility (EMC) Part 6-2: Immunity (industrial environment)
EN 61000-6-3: 2007/A1:2011	Generic standards - Electromagnetic compatibility (EMC) Part 6-3: Emission (residential environment)
EN IEC 60079-0: 2018	Explosive atmospheres Part 0: Equipment - General requirements
EN 60079-1: 2014	Explosive atmospheres Part 1: Equipment protection by flameproof enclosures "d"
EN 60079-31: 2014	Explosive atmospheres Part 31: Equipment dust ignition protection by enclosure "t"
EN IEC 63000:2018	Technical documentation for the assessment of electrical and electronic products with respect to the restriction of hazardous substances

Other applied standards:

DIN EN 60529: 2014	Degrees of protection provided by enclosures (IP code)

The products are marked additionally with the following characteristics on the name plate:

Ex II 2G Ex db IIC T6 Gb; Ex II 2D Ex tb IIIC T80°C Db

The Type Examination Test was carried out by:

NB0637, IBExU Institut für Sicherheitstechnik GmbH,
Fuchsmühlenweg 7,
09599 Freiberg, DEUTSCHLAND
No. of the EU type-examination certificate: IBExU 11 ATEX 1125 X

Trossingen, 02/15/2022

Mr. Klaus Tessari, CEO

TR-ECE-KE-DGB-0267-10.DOC

© TR-Electronic GmbH 2014, All Rights Reserved

8.3 EC / EU declaration of conformity, A*V70 and A**88

TR electronic

EC / EU Declaration of Conformity

The Rotative Measuring Systems **A*V70 and AD*88 with "TR-Explosion Protection Enclosure" and functional safety**

Type: AEV70, AM70, AOV70, ADV88, ADS88
Order-No.: A*V70*-*****, ADV88*-*****, ADS88*-*****

have been developed, designed and manufactured to comply with the EU-Directives

Electromagnetic Compatibility (EMC)	**2014/30/EU**	(L 96/79)
Machinery Directive	**2006/42/EC**	(L 157/24)
Equipment and protective systems intended for use in potentially explosive atmospheres (ATEX)	**2014/34/EU**	(L 96/309)
Restriction of the use of certain hazardous substances in electrical and electronic equipment (RoHS)	**2011/65/EU**	(L 174/88)

under the sole responsibility of

TR Electronic GmbH
Eglishalde 6
D - 78647 Trossingen
Tel.: +49 7425/228-0
Fax: +49 7425/228-33
Germany

The following harmonized standards were applied:

EN 61000-6-2:2005/AC:2005 with increased test standards: DIN EN 61326-3-1:2018	Generic standards - Electromagnetic compatibility (EMC) Immunity (industrial environment)
EN 61000-6-3:2007/A1:2011	Generic standards - Electromagnetic compatibility (EMC) Emission (residential environment)
EN 61800-5-2:2007	Adjustable speed electrical power drive systems Safety requirements - Functional
EN ISO 13849-1:2015	Safety of machinery - Safety-related parts of control systems General principles for design
EN 60204-1: 2018 (in extracts)	Safety of machinery - Electrical equipment of machines General requirements
EN IEC 62061:2021	Safety of machinery - Functional safety of safety-related control systems
EN ISO 20607:2019	Safety of machinery - Instruction handbook - General drafting principles
EN IEC 60079-0: 2018	Explosive atmospheres Equipment - General requirements
EN 60079-1: 2014	Explosive atmospheres Equipment protection by flameproof enclosures "d"
EN 60079-31:2014	Explosive atmospheres Equipment dust ignition protection by enclosure "t"
EN IEC 63000:2018	Technical documentation for the assessment of electrical and electronic products with respect to the restriction of hazardous substances

Page 1 of 2 TR-ECE-KE-GB-0344-07.docx

© TR-Electronic GmbH 2014, All Rights Reserved Printed in the Federal Republic of Germany

Other applied standards:

DIN EN 61508 Part 1-7:2011	Functional safety of electrical/electronic/programmable electronic safety-related systems
DIN EN 60529:2014	Degrees of protection provided by enclosures (IP code)

The products are marked additionally with the following characteristics on the name plate:

Ⓔx II 2G Ex db IIC T6 Gb; Ⓔx II 2D Ex tb IIIC T80°C Db

The EU type examination according to the ATEX Directive for the Explosion Protection Enclosure was carried out by the notified body:

NB0637, IBExU Institut für Sicherheitstechnik GmbH,
Fuchsmühlenweg 7,
09599 Freiberg, GERMANY
No. of the EU type-examination certificate: IBExU 11 ATEX 1125 X

The EC type examination and certification according to the Machinery Directive as Logic Unit For Safety Functions was carried out by the notified body:

NB0035, TÜV Rheinland Industrie Service GmbH,
Alboinstr. 56,
12103 Berlin, GERMANY
A*V70: No. of the EC type-examination certificate: 01/205/5516.xx/xx (internal I_58 series)
AD*88: No. of the EC type-examination certificate: 01/205/5518.xx/xx (internal 75 series)

Authorized to compile the technical file:

TR Electronic GmbH, Eglishalde 6, 78647 Trossingen, Germany

Trossingen, 09/22/2023

Mr. Klaus Tessari, CEO

Printed in the Federal Republic of Germany © TR-Electronic GmbH 2014, All Rights Reserved

8.4 IECEx certificate

IECEx Certificate of Conformity

INTERNATIONAL ELECTROTECHNICAL COMMISSION
IEC Certification System for Explosive Atmospheres

for rules and details of the IECEx Scheme visit www.iecex.com

Certificate No.:	**IECEx IBE 21.0025X**	Page 1 of 3	Certificate history:
Status:	**Current**	Issue No: 0	
Date of Issue:	2021-10-11		
Applicant:	**TR-Electronic GmbH** Eglishalde 6 Trossingen 78647 **Germany**		
Equipment:	**Rotary encoder A**70*-***** and A**88*-*******		
Optional accessory:			
Type of Protection:	**Flameproof enclosure "d", Protection by enclosure "t"**		
Marking:	Ex db IIC T6 Gb Ex tb IIIC T80 °C Db		

Approved for issue on behalf of the IECEx Certification Body:	**Alexander Henker**
Position:	**Deputy Head of department Certification Body**
Signature: (for printed version)	A. Henker
Date:	2021-10-11

1. This certificate and schedule may only be reproduced in full.
2. This certificate is not transferable and remains the property of the issuing body.
3. The Status and authenticity of this certificate may be verified by visiting www.iecex.com or use of this QR Code.

Certificate issued by:

IBExU Institut für Sicherheitstechnik GmbH
Fuchsmühlenweg 7
09599 Freiberg
Germany

TR-ECE-TI-GB-0380-00

© TR-Electronic GmbH 2014, All Rights Reserved

IECEx Certificate of Conformity

Certificate No.: **IECEx IBE 21.0025X** Page 2 of 3

Date of issue: 2021-10-11 Issue No: 0

Manufacturer: **TR-Electronic GmbH**
Eglishalde 6
Trossingen 78647
Germany

Additional manufacturing locations:

This certificate is issued as verification that a sample(s), representative of production, was assessed and tested and found to comply with the IEC Standard list below and that the manufacturer's quality system, relating to the Ex products covered by this certificate, was assessed and found to comply with the IECEx Quality system requirements.This certificate is granted subject to the conditions as set out in IECEx Scheme Rules, IECEx 02 and Operational Documents as amended

STANDARDS :
The equipment and any acceptable variations to it specified in the schedule of this certificate and the identified documents, was found to comply with the following standards

IEC 60079-0:2017 Explosive atmospheres - Part 0: Equipment - General requirements
Edition:7.0

IEC 60079-1:2014-06 Explosive atmospheres - Part 1: Equipment protection by flameproof enclosures "d"
Edition:7.0

IEC 60079-31:2013 Explosive atmospheres - Part 31: Equipment dust ignition protection by enclosure "t"
Edition:2

This Certificate **does not** indicate compliance with safety and performance requirements other than those expressly included in the Standards listed above.

TEST & ASSESSMENT REPORTS:
A sample(s) of the equipment listed has successfully met the examination and test requirements as recorded in:

Test Report:

DE/IBE/ExTR21.0032/00

Quality Assessment Report:

DE/TPS/QAR21.0007/00

TR-ECE-TI-GB-0380-00

© TR-Electronic GmbH 2014, All Rights Reserved

IECEx Certificate of Conformity

Certificate No.:	**IECEx IBE 21.0025X**	Page 3 of 3
Date of issue:	2021-10-11	Issue No: 0

EQUIPMENT:
Equipment and systems covered by this Certificate are as follows:

The Rotary encoder type A**70*-***** and A**88*-***** is used with built-in systems to record angular motions for the stationary use in explosive gas and dust atmospheres in the Equipment Protection Level Gb and Db.
It consists of a flameproof enclosure from stainless steel or aluminium, in which is placed the evaluation electronics to record the position variation. The signal of the position or angular motions is transferred by a beared shaft (encoder).

Technical data:

Nominal voltage	11 up to 27 V DC	
Maximum power input	2.3 W	(A**70*-*****, variant stainless steel)
	3 W	(A**70*-*****, variant aluminium)
	4 W	(A**88*-*****, variant stainless steel)
	6 W	(A**88*-*****, variant aluminium)
Maximum speed	6000 rpm	
Ambient temperature range	-20 °C up to +60 °C	
IP-degree of protection	IP66	(according to EN 60529)

SPECIFIC CONDITIONS OF USE: YES as shown below:

- Repairs of the flameproof joints must be made in compliance with the constructive specifications provided by the manufacturer. Repairs must not be made on the basis of values specified in tables 3 and 4 of EN 60079-1.
- High charging processes have to be avoided at use in explosive dust atmospheres.

TR-ECE-TI-GB-0380-00

© TR-Electronic GmbH 2014, All Rights Reserved

8.5 Accessories

Download:
https://www.tr-electronic.com/products/rotary-encoders/accessories.html

8.6 Interface-specific user manuals

Download
https://www.tr-electronic.com/service/downloads/operating-manuals/encoder-and-linear-transducer.html?L=0

© TR-Electronic GmbH 2014, All Rights Reserved

8.7 Drawings, A**70

8.7.1 Standard

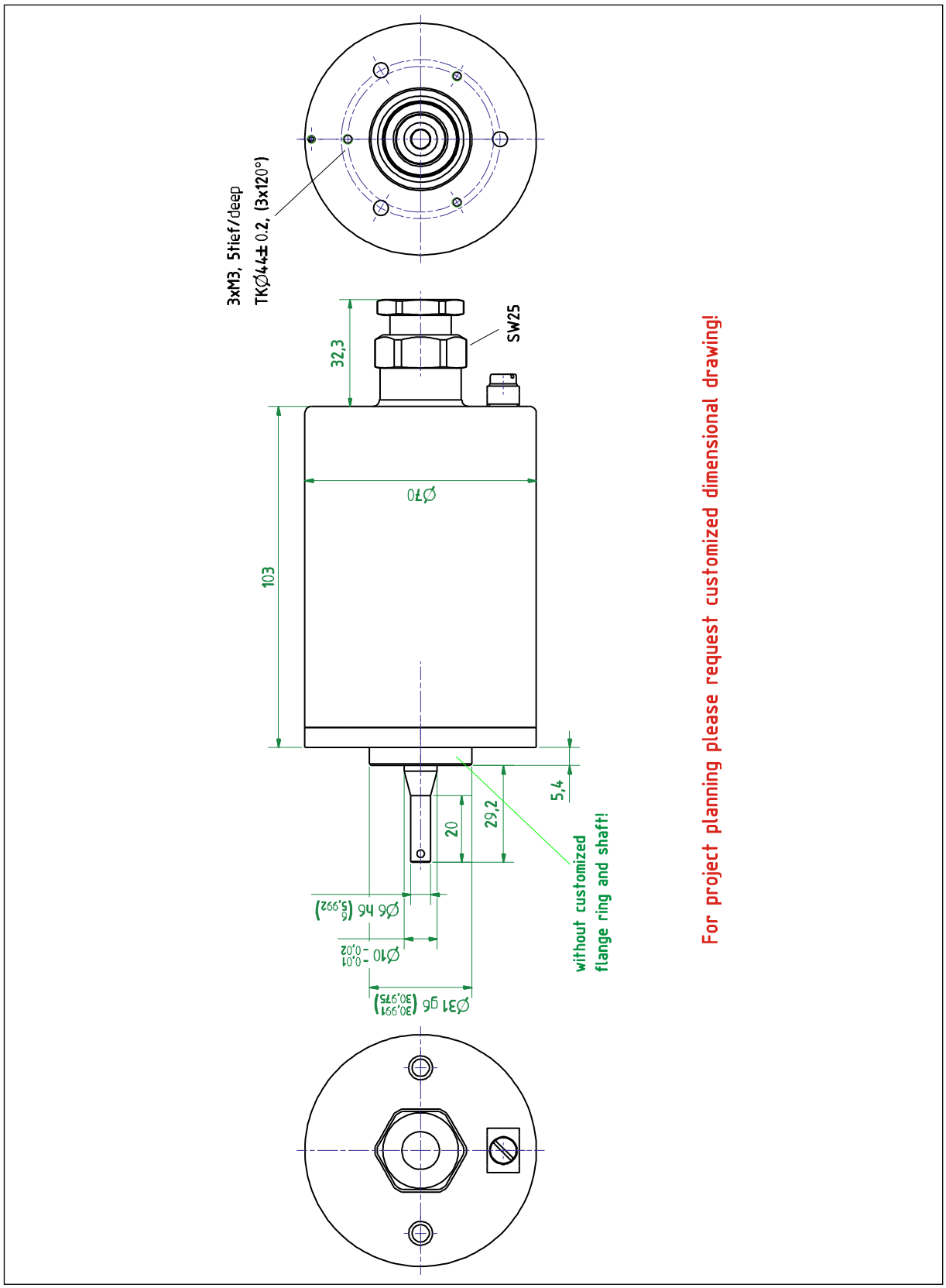

© TR-Electronic GmbH 2014, All Rights Reserved

8.7.2 Shortened construction form

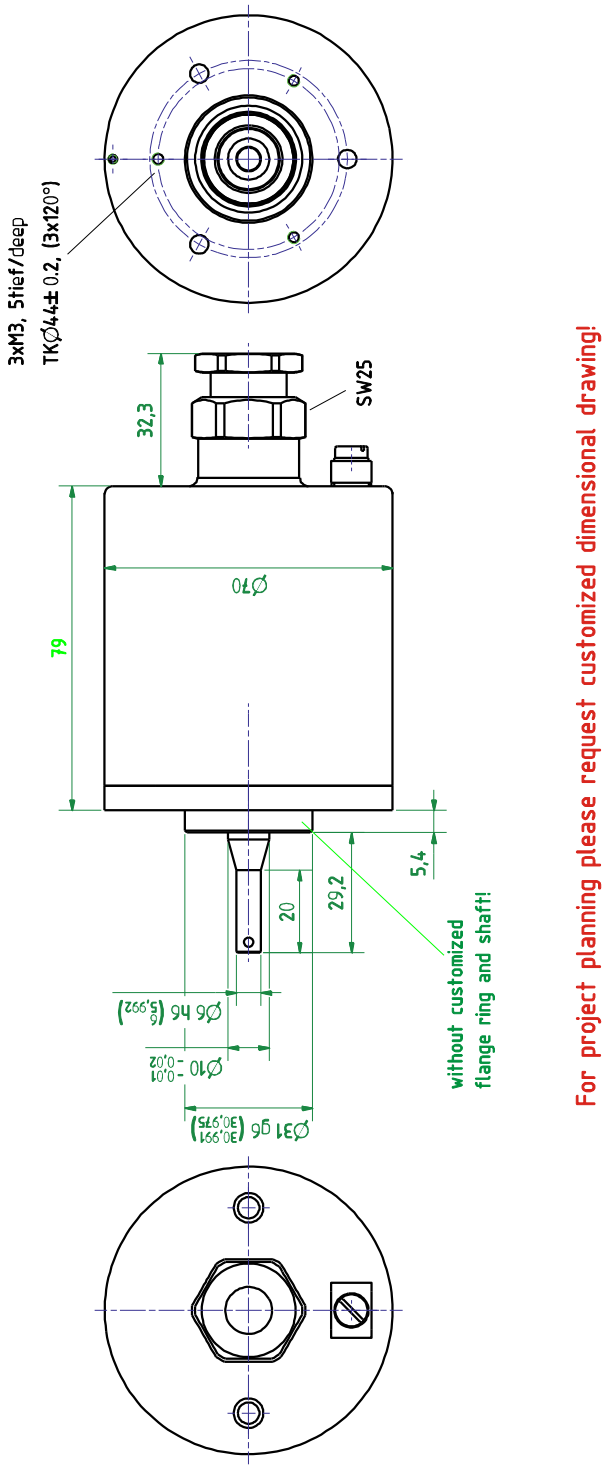

For project planning please request customized dimensional drawing!

© TR-Electronic GmbH 2014, All Rights Reserved

8.7.3 Extended construction form

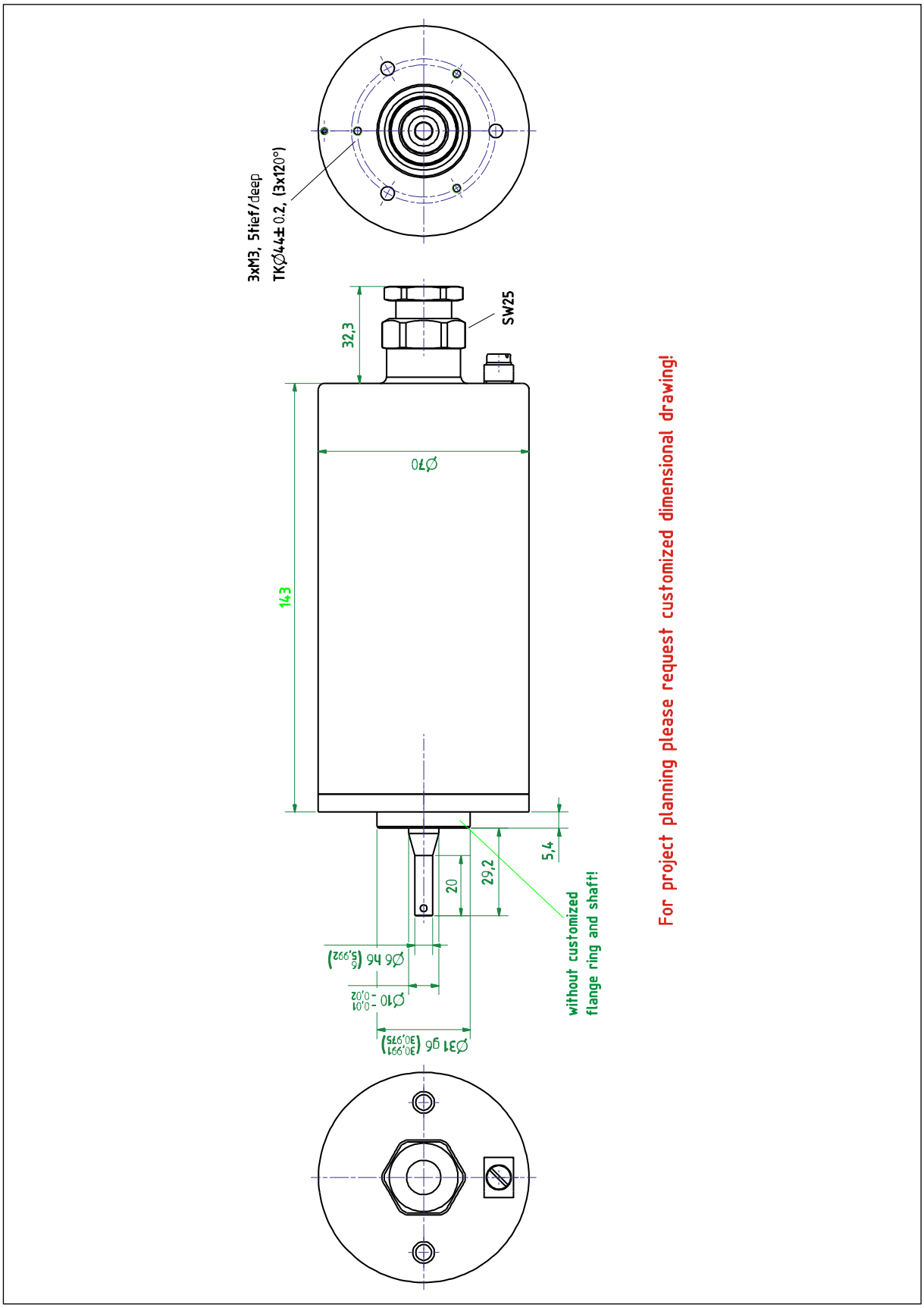

© TR-Electronic GmbH 2014, All Rights Reserved

8.8 Drawings, A**88

8.8.1 Standard

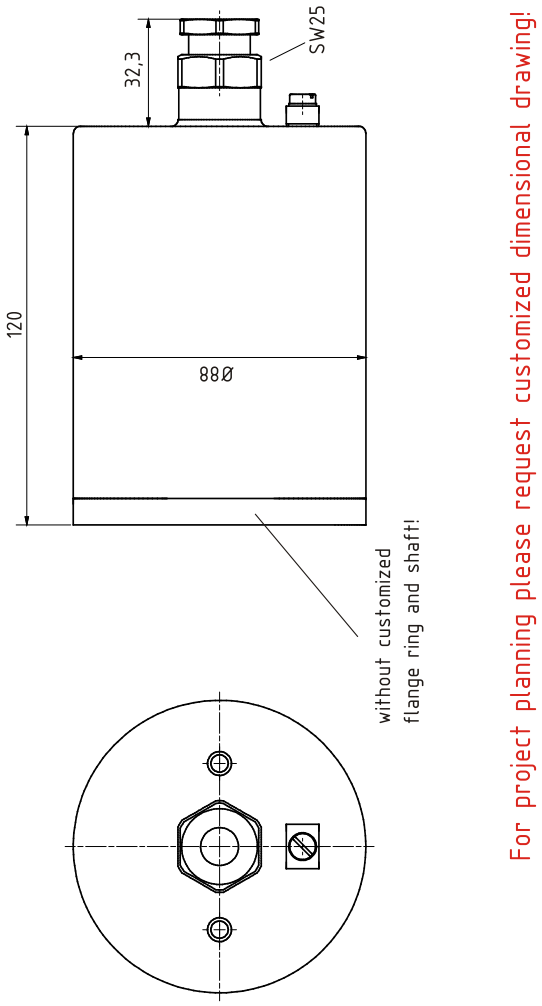

© TR-Electronic GmbH 2014, All Rights Reserved

8.8.2 Shortened construction form

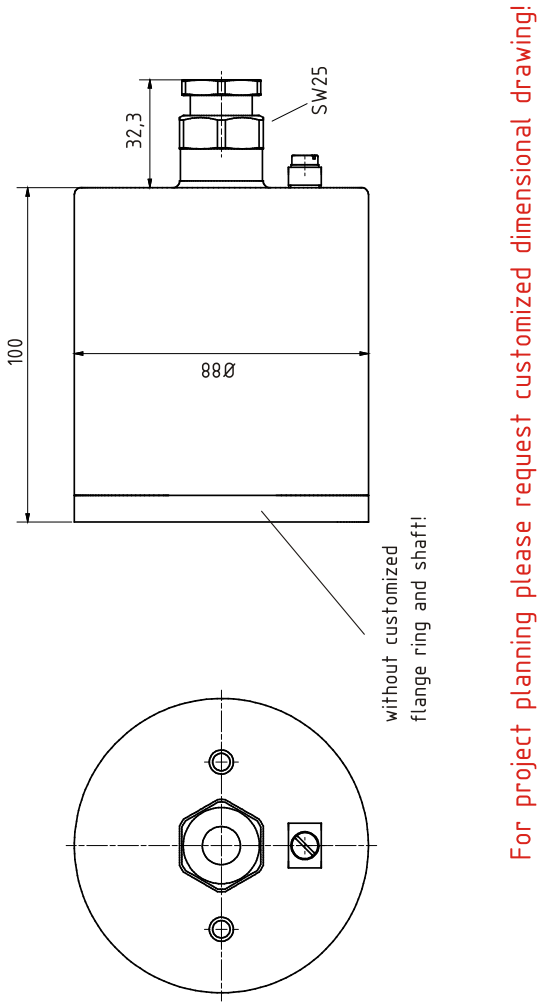

For project planning please request customized dimensional drawing!

© TR-Electronic GmbH 2014, All Rights Reserved

8.8.3 Extended construction form

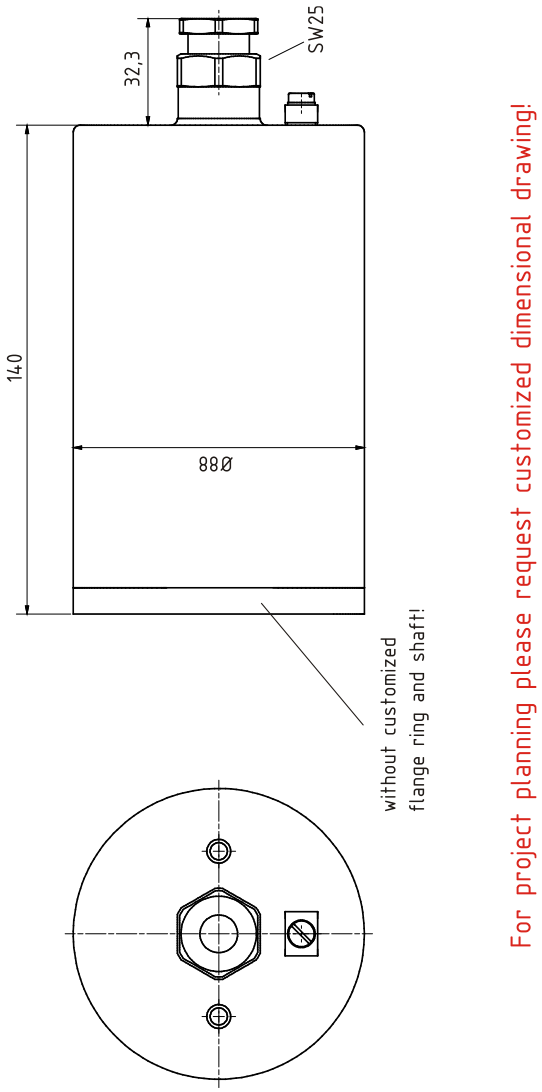

For project planning please request customized dimensional drawing!

© TR-Electronic GmbH 2014, All Rights Reserved

[1] **EU-TYPE EXAMINATION CERTIFICATE** - TRANSLATION

[2] Equipment and protective systems intended for use in potentially explosive atmospheres, directive 2014/34/EU

[3] EU-Type Examination Certificate Number **IBExU11ATEX1125 X** | Issue 1

[4] Equipment: **Rotary encoder**
Type A**70*-***** and A**88*-*****

[5] Manufacturer: TR-Electronic GmbH

[6] Address: Eglishalde 6
78647 Trossingen
GERMANY

[7] This product and any acceptable variation thereto are specified in the schedule to this certificate and the documents therein referred to.

[8] IBExU Institut für Sicherheitstechnik GmbH, Notified Body number 0637 in accordance with Article 17 of Directive 2014/34/EU of the European Parliament and of the Council, dated 26 February 2014, certifies that this product has been found to comply with the essential health and safety requirements relating to the design and construction of products intended for use in potentially explosive atmospheres given in Annex II to the Directive.

The examination and test results are recorded in the confidential test report IB-21-3-0093.

[9] Compliance with the essential health and safety requirements has been assured by compliance with:

EN IEC 60079-0:2018/AC:2020-02 EN 60079-1:2014/AC:2018-09 EN 60079-31:2014

Except in respect of those requirements listed at item [18] of the schedule.

[10] The sign "X" placed after the certificate number indicates that the product is subject to the specific conditions of use specified in the schedule to this certificate.

[11] This EU-type examination certificate relates only to the design and construction of the specified product. Further requirements of the Directive apply to the manufacturing process and supply of this product. These are not covered by this certificate.

[12] The marking of the product shall include the following:

Ex II 2G Ex db IIC T6 Gb **Ex II 2D Ex tb IIIC T80 °C Db**

IBExU Institut für Sicherheitstechnik GmbH
Fuchsmühlenweg 7
09599 Freiberg, GERMANY

Phone: +49 (0)3731 3805-0
Fax: +49 (0)3731 3805-10

By order

Dipl.-Ing. (FH) Henker

- Seal -
(Notified Body number 0637)

Certificates without seal and signature are not valid. Certificates may only be duplicated completely and unchanged. In case of dispute, the German text shall prevail.

Freiberg, 2021-10-11

[13] **Schedule**

[14] **Certificate number IBExU11ATEX1125 X** | Issue 1

[15] **Description of product**
The Rotary encoder type A**70*-***** and A**88*-***** is used with built-in systems to record angle modifications for the stationary use in explosive gas and dust atmospheres in the equipment categories 2G and 2D. It consists of a flameproof enclosure from stainless steel or aluminium, into which the evaluation electronic is placed to record the position variation. The signal of the position respectively angle modification is transmitted by beared shaft (encoder).

Technical data:

– Nominal voltage:	11 up to 27 V DC
– max. power input:	2.3 W (A**70*-*****, variant stainless steel)
	3 W (A**70*-*****, variant aluminium)
	4 W (A**88*-*****, variant stainless steel)
	6 W (A**88*-*****, variant aluminium)
– max. Speed:	6000 min^{-1}
– Ambient temperature range:	-20 °C up to +60 °C
– IP-Degree of protection according to EN 60529:	IP66

Changes compared to issue 0 of this certificate and additions thereof:
- The encoder complies with the requirements of the current standard editions of EN 60079 and is marked with the equipment protection level.
- IP-Degree of protection is IP66.
- Qualification of a new label material.

[16] **Test report**
The test results are recorded in the confidential test report IB-21-3-0093 of 2021-10-08.
The test documents are part of the test report and they are listed there.

Summary of the test results
The Rotary encoder type A**70*-***** and A**88*-***** fulfils the requirements of the explosion protection for equipment of group II, category 2G in the type of protection flameproof enclosure "db" as well as group II, category 2D in type of protection dust explosion protection by enclosure "tb".

[17] **Special conditions for use**
- Repairs of the flameproof joints must be made in compliance with the constructive specifications provided by the manufacturer. Repairs must not be made on the basis of values specified in table 3 and 4 of EN 60079-1.
- High charging processes have to be avoided at use in explosive dust atmospheres.

[18] **Essential Health and Safety Requirements**
In addition to the essential health and safety requirements (EHSRs) covered by the standards listed at item [9], the following are considered relevant to this product, and conformity is demonstrated in the test report:
- not applicable -

[19] **Drawings and documents**
The documents are listed in the test report.

IBExU Institut für Sicherheitstechnik GmbH
Fuchsmühlenweg 7
09599 Freiberg, GERMANY

By order

Dipl.-Ing. (FH) Henker

Freiberg, 2021-10-11

EU-Konformitätserklärung

Die Rotativ Mess-System Baureihe A*V70 mit „TR-Explosionsschutzgehäuse“

Typ: AEV70, AMV70, AOV70
Art.-Nr.: A**70*-*****

wurde entwickelt, konstruiert und gefertigt in Übereinstimmung mit den EU-Richtlinien

Elektromagnetische Verträglichkeit	**2014/30/EU**	(L 96/79)
Geräte und Schutzsysteme zur bestimmungsgemäßen Verwendung in explosionsgefährdeten Bereichen	**2014/34/EU**	(L 96/309)
Beschränkung der Verwendung bestimmter gefährlicher Stoffe in Elektro- und Elektronikgeräten (RoHS)	**2011/65/EU**	(L 174/88)

in alleiniger Verantwortung von
TR-Electronic GmbH
Eglishalde 6
D - 78647 Trossingen
Tel.: 07425/228-0
Fax: 07425/228-33
Deutschland

Folgende harmonisierte Normen wurden angewandt:

EN 61000-6-2: 2005/AC:2005	Fachgrundnorm Elektromagnetische Verträglichkeit (EMV) Teil 6-2: Störfestigkeit (Industriebereich)
EN 61000-6-3: 2007/A1:2011	Fachgrundnorm Elektromagnetische Verträglichkeit (EMV) Teil 6-3: Störaussendung (Wohnbereich)
EN IEC 60079-0: 2018	Explosionsfähige Atmosphäre Teil 0: Geräte - Allgemeine Anforderungen
EN 60079-1: 2014	Explosionsfähige Atmosphäre Teil 1: Geräteschutz durch druckfeste Kapselung "d"
EN 60079-31: 2014	Explosionsfähige Atmosphäre Teil 31: Geräte - Staubexplosionsschutz durch Gehäuse "t"
EN IEC 63000:2018	Technische Dokumentation zur Beurteilung von Elektro- und Elektronikgeräten hinsichtlich der Beschränkung gefährlicher Stoffe

Sonstige angewandte Normen:

DIN EN 60529: 2014	Schutzarten durch Gehäuse (IP-Code)

Die Produkte sind mit folgender zusätzlichen Kennzeichnung auf dem Typenschild versehen:

Ex II 2G Ex db IIC T6 Gb; Ex II 2D Ex tb IIIC T80°C Db

Die Baumusterprüfung wurde durchgeführt von:

NB0637, IBExU Institut für Sicherheitstechnik GmbH,
Fuchsmühlenweg 7,
09599 Freiberg, DEUTSCHLAND
EU-Baumusterprüfbescheinigungs-Nr.: IBExU 11 ATEX 1125 X

Trossingen, 15.02.2022

Hr. Klaus Tessari, Geschäftsleitung

EU Declaration of Conformity

The Rotative Measuring System A*V70 with “TR-Explosion Protection Enclosure”

Type: AEV70, AMV70, AOV70
Order-No.: A**70*-*****

was developed, designed and manufactured to comply with the EU-Directives

Electromagnetic Compatibility	**2014/30/EU**	(L 96/79)
Equipment and protective systems intended for use in potentially explosive atmospheres	**2014/34/EU**	(L 96/309)
Restriction of the use of certain hazardous substances in electrical and electronic equipment (RoHS)	**2011/65/EU**	(L 174/88)

under the sole responsibility of

TR-Electronic GmbH
Eglishalde 6
D - 78647 Trossingen
Tel.: +49 7425/228-0
Fax: +49 7425/228-33
Germany

The following harmonized standards were applied:

EN 61000-6-2: 2005/AC:2005	Generic standards - Electromagnetic compatibility (EMC) Part 6-2: Immunity (industrial environment)
EN 61000-6-3: 2007/A1:2011	Generic standards - Electromagnetic compatibility (EMC) Part 6-3: Emission (residential environment)
EN IEC 60079-0: 2018	Explosive atmospheres Part 0: Equipment - General requirements
EN 60079-1: 2014	Explosive atmospheres Part 1: Equipment protection by flameproof enclosures "d"
EN 60079-31: 2014	Explosive atmospheres Part 31: Equipment dust ignition protection by enclosure "t"
EN IEC 63000:2018	Technical documentation for the assessment of electrical and electronic products with respect to the restriction of hazardous substances

Other applied standards:

DIN EN 60529: 2014	Degrees of protection provided by enclosures (IP code)

The products are marked additionally with the following characteristics on the name plate:

Ex II 2G Ex db IIC T6 Gb; Ex II 2D Ex tb IIIC T80°C Db

The Type Examination Test was carried out by:

NB0637, IBExU Institut für Sicherheitstechnik GmbH,
Fuchsmühlenweg 7,
09599 Freiberg, DEUTSCHLAND
No. of the EU type-examination certificate: IBExU 11 ATEX 1125 X

Trossingen, 02/15/2022

Mr. Klaus Tessari, CEO

UK Declaration of Conformity

The Rotative Measuring System A*V70 with "TR-Explosion Protection Enclosure"

Type: AEV70, AMV70, AOV70
Order-No.: A**70*-*****

was developed, designed and manufactured in accordance with the UK statutory instruments and their amendments:

The Electromagnetic Compatibility Regulations 2016	**S.I. 2016 No. 1091**
Equipment and Protective Systems Intended for use in Potentially Explosive Atmospheres Regulations 2016	**S.I. 2016 No. 1107**
The Restriction of the Use of Certain Hazardous Substances in Electrical and Electronic Equipment Regulations 2012	**S.I. 2012 No. 3032**

under the sole responsibility of the manufacturer:

TR-Electronic GmbH
Eglishalde 6
D - 78647 Trossingen
Tel.: +49 7425/228-0
Fax: +49 7425/228-33
Germany

Name and address of authorised representative:

TR-Electronic Ltd.
4 William House
Old St. Michaels Drive
GB - Braintree Essex CM7 2AA
Tel.: +44 1 371 876 187
Fax: +44 1 371 876 287

The following designated standards were applied:

EN 61000-6-2:2005/AC:2005	Generic standards - Electromagnetic compatibility (EMC) Part 6-2: Immunity (industrial environment)
EN 61000-6-3:2007/A1:2011	Generic standards - Electromagnetic compatibility (EMC) Part 6-3: Emission (residential environment)
EN IEC 60079-0:2018	Explosive atmospheres Part 0: Equipment - General requirements
EN 60079-1:2014	Explosive atmospheres Part 1: Equipment protection by flameproof enclosures "d"
EN 60079-31:2014	Explosive atmospheres Part 31: Equipment dust ignition protection by enclosure "t"
EN IEC 63000:2018	Technical documentation for the assessment of electrical and electronic products with respect to the restriction of hazardous substances

Other applied standards:

DIN EN 60529: 2014	Degrees of protection provided by enclosures (IP code)

The products are marked additionally with the following characteristics on the name plate:

Ex II 2G Ex db IIC T6 Gb; Ex II 2D Ex tb IIIC T80°C Db

The Type Examination Test was carried out by:

NB0637, IBExU Institut für Sicherheitstechnik GmbH,
Fuchsmühlenweg 7,
09599 Freiberg, GERMANY
No. of the EU type-examination certificate: IBExU 11 ATEX 1125 X

Trossingen, 11/08/2022

Mr. Klaus Tessari, CEO

AEV70I*1024 INC_PP 36ZB10GL

Order No.: AEV70I-10032
16.12.2025
0101010071

Stock photo

TRWin-Prog

Field-Bus

Advantages
- Also with cable pull box
- Especially for rotary encoders
- Explosion protection enclosure
- Ex-Protection Zone 1/2 +pulley
- Ex-Protection Zone 1/2/21/22
- IECEx certified
- Interface variety

Technical data for AEV70I-10032

NO.OF STEPS/REV	1.024,000
NO. OF PULSES	1024
PARAMETERIZABLE	PROG.
INTERFACE	INCREMENTAL
NO. OF CHANNELS	K1-K2 NEG
ZERO-PULSE	K0 NEG
SUPPLY VOLTAGE	11-27V
POWER DISSIPATION	<3 Watt
MAX SPEED	6000 RPM
OUTPUT LEVEL	11-27V
PROTECTION CLASS	IP65

Änderungen vorbehalten.

TR-Electronic GmbH
Eglishalde 6
78647 Trossingen
Tel. +49 (0) 7425 228-0
info@tr-electronic.de
www.tr-electronic.de

AEV70I*1024 INC_PP 36ZB10GL

Order No.: AEV70I-10032
16.12.2025
0101010071

Technical data for AEV70I-10032

OPERATING TEMPERATURE	-20°C
FLANGE TYPE	ZB36
SHAFT TYPE	10GL/20
DIRECTION OF CONNECTION	PG AXIAL
cable length (m)	5,000 M
PINOUT NO.	3681
MATING PLUG	NO
OPTIONS ENC	DOKUMENT IN DEUTSCH/ENGLISCH
	EX PROTECTION HOUSING
	PROGRAMMABLE
ATEX-GAS	II 2G Ex db IIC T6 Gb
ATEX-DUST	II 2D Ex tb IIIC T80°C Db
ATEX-CERT	IBExU11ATEX1125 X
ATEX-PRUEFST	0123
DRAWING NO.	04-AEV70I-M0004X
VERSIONNO	000
FIRMWARE NO.	4376A6
DOCUMENTATION NO	DOKUMENTE
AL:	N
ECCN:	N

General data for K-A__70-___-1

Nominal voltage - Specific value	24 VDC
Power consumption	<= 3 W aluminum type
Device design - Type	Single-/Multi-Turn
PROFIBUS - Interface - PROFIBUS-DP V0	IEC 61158, IEC 61784
- PNO Encoder-Profile	Class 1 and 2
CAN DeviceNet™ - Interface - CAN DeviceNet™	EN 50325-2
- Bus connection	ISO 11898-1, ISO 11898-2
- CAN Specification 2.0 A	11-Bit Identifier

Änderungen vorbehalten.

TR-Electronic GmbH
Eglishalde 6
78647 Trossingen
Tel. +49 (0) 7425 228-0
info@tr-electronic.de
www.tr-electronic.de

AEV70I*1024 INC_PP 36ZB10GL

Order No.: AEV70I-10032
16.12.2025
0101010071

General data for K-A__70-___-1

CANopen - Interface - CANopen	EN 50325-4 (CiA DS301)
- Bus connection	ISO 11898-1, ISO 11898-2
- CAN Specification 2.0 A	11-Bit Identifier
- Device-Profile for Encoder	CiA DS406
PROFINET IO - Interface - PROFINET IO – Device	IEC 61158, IEC 61784-1
- Physical Layer	Fast Ethernet, ISO/IEC 8802-3
SSI - Interface - SSI-Clock input	Optocoupler
- SSI-Data output	RS-422, 2-wire
- SSI-Clock frequency	80…1000 kHz
- SSI-Mono time, typically	20 µs
Incremental - Interface - Equipment	Optional interface
- Incremental signals, square	K1± K2±
- Impulses, square wave	1024 or 2048
- Output driver, TTL	RS-422, 5 VDC
Analog - Interface - Voltage/Current	Factory setting
- Resolution	16 Bit D/A converter
- Voltage output	0…+10 VDC
- Current output	0…20 mA
Type of parametrization	programmable
Programming - Tool	Fieldbus-Device
	TR-Soft: TRWinProg
External inputs - F/R	Count direction
- Preset	electronic adjustment
- Logic level	"0" < +2V, "1" = Supply
Maximum Speed, mechanically	<= 6000 1/min
Shaft load, axial/radial	<= 40 N, <= 60 N
Bearing life time	>= 3.68E+10 revolutions
Bearing life time - Parameter - Speed	3000 1/min
- Operating temperature	60 °C
- Shaft load, axial/radial	<= 20 N, <= 30 N

Änderungen vorbehalten.

TR-Electronic GmbH
Eglishalde 6
78647 Trossingen
Tel. +49 (0) 7425 228-0
info@tr-electronic.de
www.tr-electronic.de

AEV70I*1024 INC_PP 36ZB10GL

Order No.: AEV70I-10032
16.12.2025
0101010071

General data for K-A__70-___-1

Point of origin, shaft load	at the shaft end
Shaft type - Shaft diameter [mm]	10
- Shaft diameter [mm]	12

Environmental data

Vibration - Specific value	<= 100 m/s²
- Sine	50…2000 Hz
Shock - Specific value	<= 1000 m/s²
- Half sine	11 ms
Immunity to disturbance	DIN EN 61000-6-2
Transient emissions	DIN EN 61000-6-3
Working temperature - Standard	-20…+60 °C
Storage temperature, dry	-30…+80 °C
Relative humidity	98 %, non condensing
Protection class - Standard	IP65
- Optional	extended to IP67
Explosive atmospheres - Documentation available in	German
- Documentation available in	English
Relev. Ex Directive/Standards - Directive 2014/34/EU (ATEX)	Intended use
- EN IEC 60079-0	General requirements
- EN/IEC 60079-1	Flameproof enclosures "d"
- EN/IEC 60079-14	Installation, erection
- EN/IEC 60079-31	Dust ignition protection "t"
- DIN EN 60529	Degrees of protection, IP code
- EN ISO 80079-36 *	Basic method, requirements *
- EN ISO 80079-37 *	constructional safety 'c' *
- *	in case of type with draw wire
- EN 1127-1 *	Basic concepts, methodology *

Änderungen vorbehalten.

TR-Electronic GmbH
Eglishalde 6
78647 Trossingen
Tel. +49 (0) 7425 228-0
info@tr-electronic.de
www.tr-electronic.de

AEV70I*1024 INC_PP 36ZB10GL

Order No.: AEV70I-10032
16.12.2025
0101010071

Environmental data

Ex protection - Data, Gas - Device group /-category	II 2G (Gb, Zone 1)
- Ignition protection type	h (constructional safety) *
- Ignition protection type	db (Flameproof enclosures)
- Group	IIC (Hydrogen)
- Temperature, surface	T5 (<= 100 °C) *
- Temperature, surface	T6 (<= 85 °C)
- *	in case of type with draw wire
Ex protection - Data, Dust - Device group /-category	II 2D (Db, Zone 21)
- Ignition protection type	tb (Protection by enclosure)
- Group	IIIC (conductive dust)
- Temperature, surface	T80°C
- Notice	Ex housing without draw wire!
Type examination certificates	IBExU 11 ATEX 1125 X
IECEx Certificate	IECEx IBE 21.0025 X

Änderungen vorbehalten.

TR-Electronic GmbH
Eglishalde 6
78647 Trossingen
Tel. +49 (0) 7425 228-0
info@tr-electronic.de
www.tr-electronic.de

Pin assignment

Pin assignment number: 3681 Index: 13.01.2021

Connector name: with cable outlet **Pin-count: 16** **Page: 1/1**

Pin	Designation	Description	Colour
1	CH_A_OUT	Channel A	green
2	/CH_A_OUT	Channel A inverted	yellow
3	not connected		
4	CH_B_OUT	Channel B	pink
5	/CH_B_OUT	Channel B inverted	blue
6	not connected		
7	CH_I_OUT	Channel Reference	black
8	/CH_I_OUT	Channel Reference inverted	violet
9	not connected		
10	Ser.Program+_IN/OUT	Ser. programming interface RS485	red/blue
11	Ser.Program-_IN/OUT	Ser. programming interface RS485	white/green
12	not connected		
13	not connected		
14	not connected		
15	Supply Voltage IN	Supply voltage	white
16	Ground IN	Ground	brown

SCHIRM :

'Schirm vom Kabel (Litze: grün/gelb) an Lötöse M2,5 anlöten !!!
****
'

WARNING

'De-energize the system before carrying out wiring work or opening and closing electrical connections !
Short-circuits, voltage peaks, etc. can cause operating failures and uncontrolled operating states, as well as serious personal injuries and damage to property.

Verdrahtungsarbeiten, Öffnen und Schließen von elektrischen Verbindungen nur im spannungslosen Zustand durchführen ! Kurzschlüsse, Spannungsspitzen etc. können zur Fehlfunktion und unkontrollierten Zuständen der Anlage bzw. zu erheblichen Personen- und Sachschäden führen.
'